ADAM-5000/TCP

Distributed DA&C System Based on Ethernet

ADVANTECH

Industrial Automation

Acknowledgments

IBM and PC are trademarks of International Business Machines Corporation.

3rd Edition
March 2005

Product Warranty

Advantech warrants to you, the original purchaser, that each of its products will be free from defects in materials and workmanship for two year from the date of purchase.

This warranty does not apply to any product which have been repaired or altered by other than repair personnel authorized by Advantech, or which have been subject to misuse, abuse, accident or improper installation. Advantech assumes no liability as a consequence of such events under the terms of this Warranty.

Because of Advantech's high quality-control standards and rigorous testing, most of our customers never need to use our repair service. If an Advantech product ever does prove defective, it will be repaired or replaced at no charge during the warranty period. For out-of-warranty repairs, you will be billed according to the cost of replacement materials, service time and freight. Please consult your dealer for more details.

If you think you have a defective product, follow these steps:

1. Collect all the information about the problem encountered (e.g. type of PC, CPU speed, Advantech products used, other hardware and software used etc.). Note anything abnormal and list any on-screen messages you get when the problem occurs.
2. Call your dealer and describe the problem. Please have your manual, product, and any helpful information readily available.
3. If your product is diagnosed as defective, you have to request an RAM number. When requesting an RMA (Return Material Authorization) number, please access ADVANTECH's RMA web site: http://www.advantech.com.tw/rma. If the web sever is shut down, please contact our office directly. You should fill in the "Problem Repair Form", describing in detail the application environment, configuration, and problems encountered. Note that error descriptions such as "does not work" and "failure" are so general that we are then required to apply our internal standard repair process.
4. Carefully pack the defective product, a completely filled-out Repair and Replacement Order Card and a photocopy of dated proof of purchase (such as your sales receipt) in a shippable container. A product returned without dated proof of purchase is not eligible for warranty service.
5. Write the RMA number visibly on the outside of the package and ship it prepaid to your dealer.

Technical Support

We want you to get the maximum performance from your products. So if you run into technical difficulties, we are here to help. For most frequently asked questions you can easily find answers in your product documentation. Moreover, there are a huge database about trouble-shooting and knowledge Base as technical reference on our website. These answers are normally a lot more detailed than the ones we can give over the phone.

So please consult this manual or the web site first. If you still cannot find the answer, gather all the information or questions that apply to your problem and, with the product close at hand, call your dealer. Our dealers are well trained and ready to give you the support you need to get the most from your Advantech products. In fact, most problems reported are minor and are able to be easily solved over the phone.

In addition, free technical support is available from Advantech engineers every business day. We are always ready to give advice on application requirements or specific information on the installation and operation of any of our products.

Website information:

You can access the most current support on our website:

http://www.advantech.com/support/

If you find a problem with our documentation, please let us know by completing and returning the “Support Request Form” on our website:

http://www.advantech.com/support/request_dir.htm

Organization of this manual

This Manual has six chapters, three appendices.

The following table lists each chapter or appendices with its corresponding title and a brief overview of the topics covered in it.

Chapter / Appendix	Title	Topics Covered
1	Understanding Your System	Introduces the suitable applying industries and the position in a SCADA system. Summarize the features and the specification of ADAM-5000/TCP. Explains the functions of the LED indicators.
2	Selecting Your Hardware	Provides a briefly selection chart and specification table of ADAM-5000 I/O modules for users to organize their system easily. Give a direction to calculate system capacity and select a certain power supply. Recommend a standard for communication cable and connector.
3	Hardware Installation Guide	Lists the necessary components and proper environment in installing process. Describes the Hardware dimension and the way to place or mount it. Explains the rule of mapping I/O address. Describes the wiring and connecting detail for ADAM-5000/TCP.
4	I/O Module Introduction	Introduces the detail specifications functions and application wiring of each ADAM-5000 I/O modules.
5	System Configuration Guide	Guides users to use Windows Utility for network & security setting, I/O range configuration, accuracy calibration, command setting, and so on.
6	Planning Your Application Program	Introduces the functions and structure of DLL drivers and command sets. Explain how to integrate these programming tools to plan your application program.
A	Design Worksheets	Provides organized worksheets for users to establish system configuration document in order.
B	Data Formats and I/O Range	Provides detail information about Data formats and I/O Range of Analog Module.
C	Grounding Reference	Explains the concepts about field grounding and shielding.

How to use this manual

The following flow chart demonstrates a thought process that you can use when you plan your ADAM-5000/TCP system.

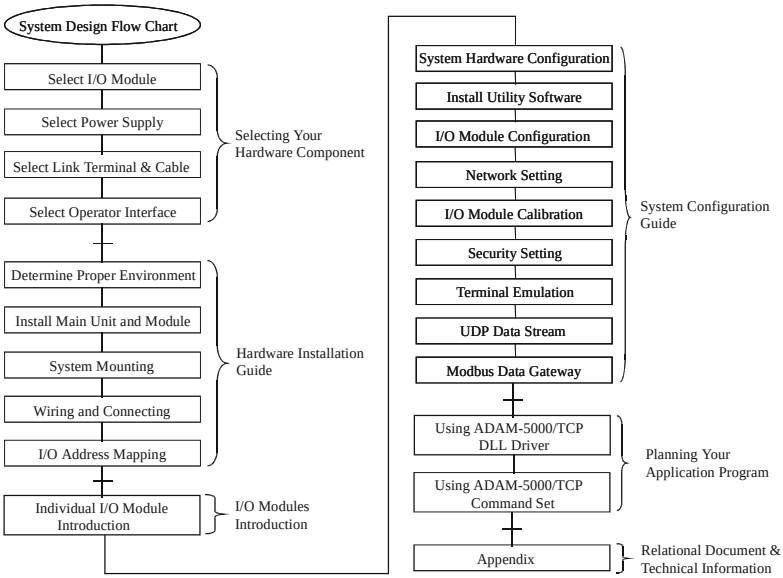

Contents

Figures

Tables

Chapter 1
Understanding Your System

Using this Chapter

1-1 Introduction

Undoubtedly, Ethernet connectivity is becoming to a big trend for industrial applications. Longer communication distances, faster communication speeds, and greater advantages attract people into developing their system based upon this network scenario. But there used to be a threshold in connecting information layers and field control layers. People usually had to prepare a data exchange server between information systems and control systems as a communication bridge. Obviously, it takes a lot of time and money. To meet user's requirements, Advantech announces the new DA&C system, the ADAM-5000/TCP, the Ethernet I/O solution for people developing their eAutomation architecture. It can be applied to various applications, such as traffic, building, telecom, water treatment, and others. See figure 1-1.

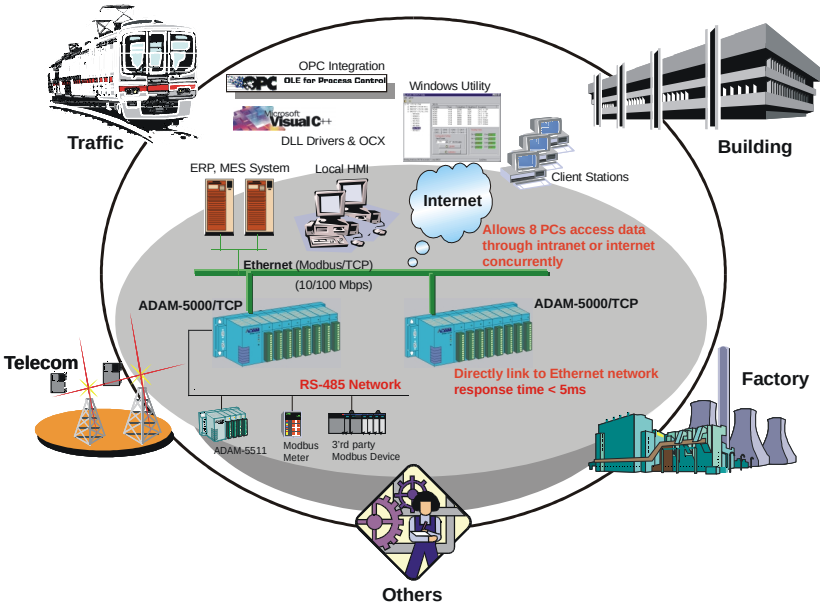

Figure 1-1: Apply to System Application

1-2 Major Features

1-2-1 Communication Network

By adopting a 32-bit RISC CPU, the ADAM-5000/TCP has greatly advanced data processing abilities for the user, especially for network communications (response time < 5ms). There is a standard RJ-45 modular jack Ethernet port on the ADAM-5000/TCP'S CPU board, and I/O modules field signals would be able to link with the Ethernet directly without assistance from other hardware devices such as converters or data gateways. The communication speeds can be auto-switched between 10 M and 100 Mbps data transfer rate depending upon the network environment. Through an Ethernet network, your DA&C systems, computer workstations, and higher-level enterprise MIS servers can access plant-floor data. Such data can be used in system supervising, product scheduling, statistical quality control, and more.

1-2-2 Modbus/TCP Protocol

Modbus/TCP is one of the most popular standards for industrial Ethernet networks. Following this communication protocol, the ADAM-5000/TCP is easy to integrate with any HMI software packages or user-developed applications that support Modbus. Users do not have to prepare a specific driver for the ADAM-5000/TCP when they install the DA&C system with their own operating application. It will certainly reduce engineer effort. Moreover, the ADAM-5000/TCP works as a Modbus data server. It allows eight PCs or tasks to access its current data simultaneously from anywhere: LAN, Intranet, or Internet.

1-2-3 Hardware Capacity & Diagnostic

Advantech's ADAM-5000/TCP is designed with a high I/O capacity and supports all types of ADAM-5000 I/O modules. Providing eight slots for any mixed modules, this DA&C system handles up to 128 I/O points (four ADAM-5024s allowed). Different from other main units, the ADAM-5000/TCP not only has a higher I/O capacity, but it also has a smarter diagnostic ability. There are eight indicators on the front case of the CPU module. Users can read the system status clearly, including power, CPU, Ethernet link, Communication active, communication rate, and more. In addition, there are also Tx and Rx LEDs on the Ethernet port, indicating data transfer and reception.

1-2-4 Communicating Isolation

High-speed transient suppressors isolate ADAM-5000/TCP Ethernet port from dangerous voltage up to 1500V_{DC} power spikes and avoid surge damage to whole system.

1-2-5 Completed set of I/O modules for total solutions

The ADAM-5000/TCP uses a convenient backplane system common to the ADAM-5000 series. Advantech's complete line of ADAM-5000 modules integrates with the ADAM-5000/TCP to support your applications (not include ADAM-5090).

Full ranges of digital module supports 10 to 30 V_{DC} input and outputs. A set of analog modules provide 16-bit resolution and programmable input and output (including bipolar) signal ranges. For details, refer to Chapter 4 I/O Modules.

1-2-6 Built-in real-time OS and watchdog timer

The microprocessor also includes a real-time OS and watchdog timer. The real-time OS is available to handle several tasks at the same time. The watchdog timer is designed to automatically reset the microprocessor if the system fails. This feature greatly reduces the level of maintenance required and makes the ADAM-5000/TCP ideal for use in applications which require a high level of system performance and stability.

1-2-7 Software Support

Based on the Modbus standard, the ADAM-5000/TCP firmware is a built-in Modbus/TCP server. Therefore, Advantech provides the necessary DLL drivers, OCX component OPC Server, and Windows Utility for users for client data for the ADAM-5000/TCP. Users can configure this DA&C system via Windows Utility; integrate with HMI software package via Modbus/TCP driver or Modbus/TCP OPC Server. Even more, you can use the DLL driver or OCX component to develop your own applications.

1-2-8 Security Setting

Though Ethernet technology comes with great benefits in speed and integration, there also exist risks about network invasion from outside. For this reason, a security protection design was built into the ADAM-5000/TCP. Once the user has set the password into the ADAM-5000/TCP firmware, important system configurations (Network, Firmware, Password) can only be changed through password verification.

1-2-9 UDP Data Stream

Most of time, each host PC in a DA&C system needs to regularly request the I/O devices via TCP/IP packs to update current data. It may cause to data collision and lower performance on the network, especially when there are frequent communication between multi-servers and I/O devices. To reduce the communication loading of the host computer on your Ethernet network, the ADAM-5000/TCP also supports UDP (User Datagram Protocol) protocol to broadcast the data packs to specific IPs without requesting commands. Users can apply this great feature to implement Data Stream, Event Trigger, and other advanced functions.

1-2-10 Modbus Ethernet Data Gateway

Much more than an I/O system, ADAM-5000/TCP provides an RS-485 network interface for other Modbus devices integration. It works as Ethernet Data Gateway, upgrading Modbus serial network devices up to Ethernet layer. Maximum 32 nodes of ADAM-5511 or 3'rd party products supported Modbus protocol are allowed to integrate with an ADAM-5000/TCP. This great feature enlarges your system scope, as opposed to other general dummy I/O system.

1-3 Technical specification of ADAM-5000/TCP System

1-3-1 System

- **CPU:** ARM 32-bit RISC CPU
- **Memory:** 4 MB Flash RAM
- **Operating System:** Real-time O/S
- **Timer BIOS:** Yes
- **I/O Capacity:** 8 slots (four ADAM-5024 allowed)
- **Status Indicator:**
  Power (3.3V, 5V), CPU, Communication (Link, Collide, 10/100 Mbps, Tx, Rx)
- **CPU Power Consumption:** 5.0W
- **Reset Push Bottom:** Yes

1-3-2 Ethernet Communication

- **Ethernet:** 10 BASE-T IEEE 802.3
  100 BASE-TX IEEE 802.3u
- **Wiring:** UTP, category 5 or greater
- **Bus Connection:** RJ45 modular jack
- **Comm. Protocol:** Modbus/TCP
- **Data Transfer Rate:** Up to 100 Mbps
- **Max Communication Distance:** 100 meters
- **Even Response Time:** < 5 ms
- **Data Stream Rate:** 50 ms to 7 days

1-3-3 Serial Communication

- **RS-485 signals:** DATA +, DATA-
- **Mode:** Half duplex, multi-drop
- **Connector:** Screw terminal
- **Transmission Speed:** Up to 115.2 Kbps
- **Max. Transmission Distance:** 4000 feet (1220 m)

1-3-4 Power

- **Unregulated 10 to 30V_{DC}**
- **Protection:** Over-voltage and power reversal

1-3-5 Isolation

- **Ethernet Communication:** 1500 V_{DC}
- **I/O Module:** 3000 V_{DC}

1-3-6 Mechanical

- **Case:** KJW with captive mounting hardware
- **Plug-in Screw Terminal Block:**
  Accepts 0.5 mm 2 to 2.5 mm 2 , 1 - #12 or 2 - #14 to #22 AWG

1-3-7 Environment

- **Operating Temperature:** - 10 to 70º C (14 to 158º F)
- **Storage Temperature:** - 25 to 85º C (-13 to 185º F)
- **Humidity:** 5 to 95%, non-condensing
- **Atmosphere:** No corrosive gases

NOTE: Equipment will operate below 30% humidity. However, static electricity problems occur much more frequently at lower humidity levels. Make sure you take adequate precautions when you touch the equipment. Consider using ground straps, anti-static floor coverings, etc. if you use the equipment in low humidity environments.

1-3-8 Dimensions

The following diagrams show the dimensions of the system unit and an I/O unit. All dimensions are in millimeters.

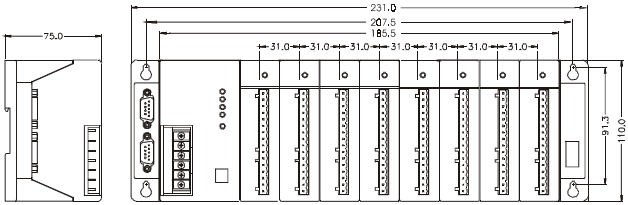

Figure 1-2: ADAM-5000/TCP system & I/O module dimensions

1-3-9 Basic Function Block Diagram

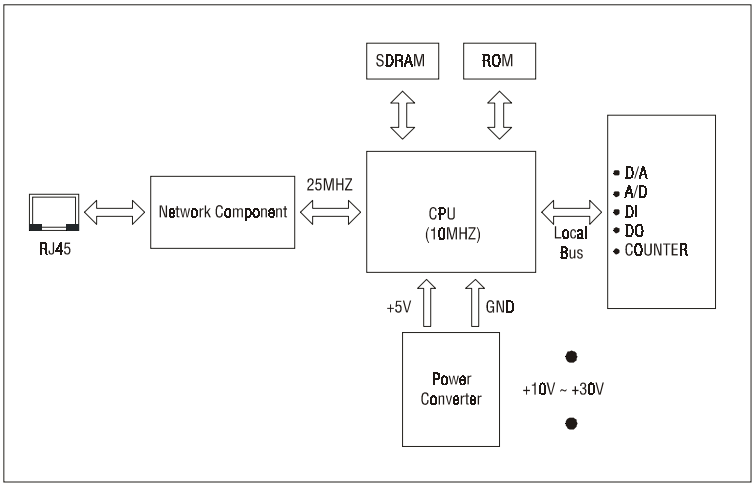

Figure 1-3: Function block diagram

1-4 LED Status of ADAM-5000/TCP main unit

There are eight LEDs on the ADAM-5000/TCP front panel. The LEDs indicate ADAM-5000/TCP's system status, as explained below:

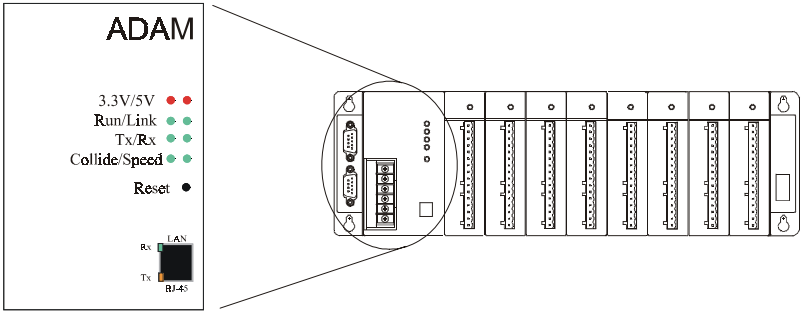

Figure 1-4: ADAM-5000/TCP LED Indicators

(1) **3.3V:** Red indicator. This LED is normal on when ARM CPU is powered on.

(2) **5V:** Red indicator. This LED is normal on when ADAM-5000/TCP system is powered on.

(3) **Run:** Green indicator. This LED is regularly blinks whenever the ADAM-5000/TCP system is running.

(4) **Link:** Green Indicator. This LED is normal on whenever the ADAM-5000/TCP's Ethernet wiring is connected.

(5) **Tx:** Green indicator. This LED is designed for the spare function (COM port transit indicator) in the future.

(6) **Rx:** Green indicator. This LED is designed for the spare function (COM port receive indicator) in the future.

(7) **Collide:** Green indicator. This LED blinks whenever there is the Ethernet data pack collision.

(8) **Speed:** Green indicator. This LED is on when the Ethernet communication speed is 100 Mbps.

(9) **Rx (RJ-45):** Green indicator. This LED blinks whenever the ADAM-5000/TCP transmitting data to Ethernet.

(10) **Tx (RJ-45):** Yellow indicator. This LED blinks whenever the ADAM-5000/TCP receiving data from Ethernet.

Chapter 2
Selecting Your Hardware Components

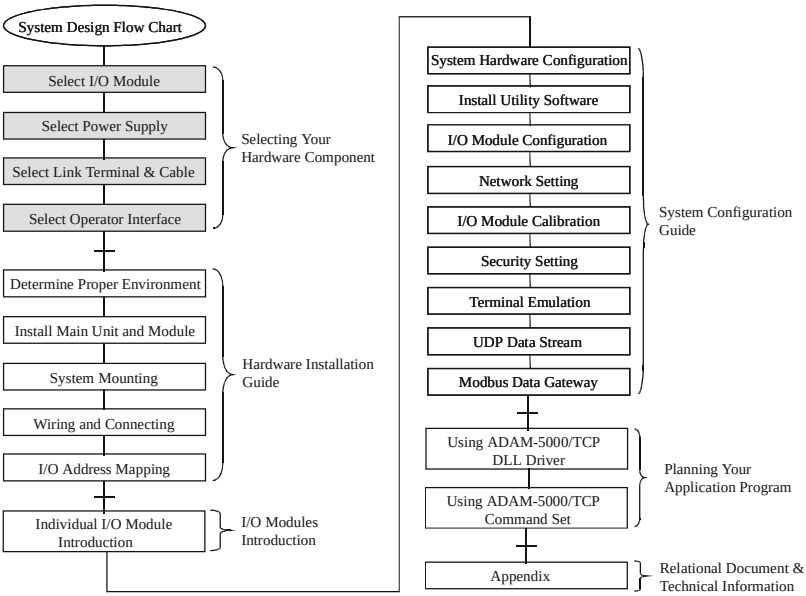

Using this Chapter

2-1 Selecting I/O Module

To organize an ADAM-5000/TCP data acquisition & control system, you need to select I/O modules to interface the main unit with field devices or processes that you have previously determined. There are several things should be considered when you select the I/O modules.

What type of I/O signal is applied in your system?

How much I/O is required to your system?

How will you place the main unit for concentrate the I/O points of an entire process.

How many ADAM-5000/TCP main units are required for distributed I/O points arrangement.

What is the required voltage range for each I/O module?

What isolation environment is required for each I/O module?

What are the noise and distance limitations for each I/O module?

Refer to table 2-1 I/O as module selection guidelines

Choose this type of I/O module:	**For these types of field devices or operations (examples):**	**Explanation:**
Discrete input module and block I/O module	Selector switches, pushbuttons, photoelectric eyes, limit switches, circuit breakers, proximity switches, level switches, motor starter contacts, relay contacts, thumbwheel switches	Input modules sense ON/OFF or OPENED/CLOSED signals. Discrete signals can be either ac or dc.
Discrete output module and block I/O module	Alarms, control relays, fans, lights, horns, valves, motor starters, solenoids	Output module signals interface with ON/OFF or OPENED/CLOSED devices. Discrete signals can be either ac or dc.
Analog input module	Thermocouple signals, RTD signals, temperature transducers, pressure transducers, load cell transducers, humidity transducers, flow transducers, potentiometers.	Convert continuous analog signals into input values for ADAM-5000/TCP
Analog output module	Analog valves, actuators, chart recorders, electric motor drives, analog meters	Interpret ADAM-5000/TCP output to analog signals (generally through transducers) for field devices.

Table 2-1: I/O Selection Guidelines

Advantech provides 15 types of ADAM-5000 I/O modules for various applications so far. The figure 2-1 and table 2-2 will help you to slect the ADAM-5000 I/O modules quickly and easily.

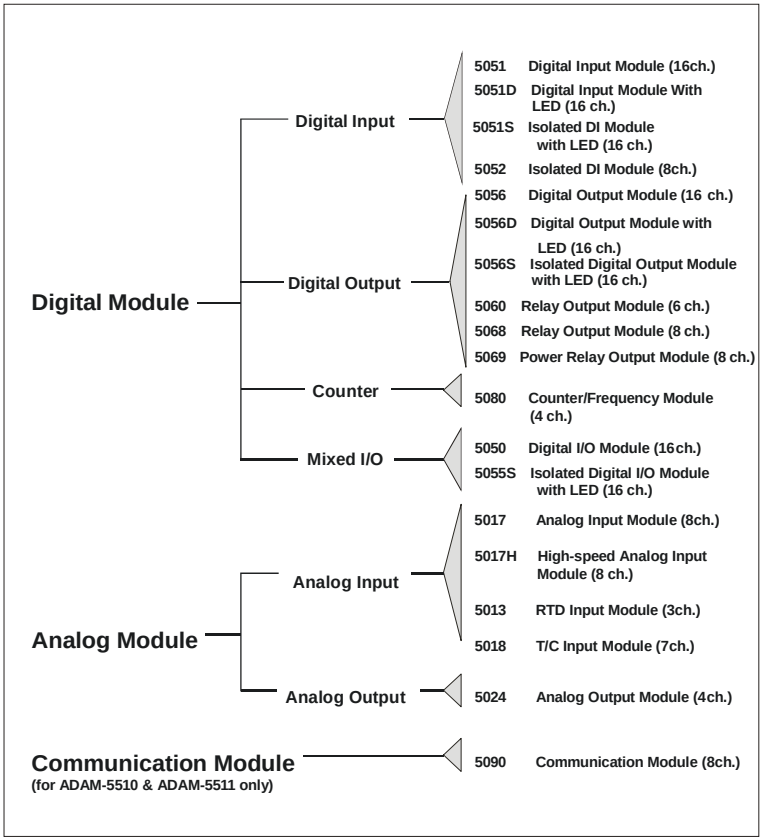

Figure 2-1: ADAM-5000 I/O Module Selection Chart

Module		ADAM-5013	ADAM-5017	ADAM-5017H	ADAM-5018	ADAM-5024	ADAM-5050	ADAM-5051	ADAM-5051D	ADAM-5051S
Analog Input	**Resolution**	16 bit	16 bit	12 bit	16 bit	-	-	-		
	Input Channel	3	8	8	7	-	-	-		
	Sampling Rate	10	10	8K	10	-	-	-		
	Voltage Input	-	±150 mV ±500 mV ±1 V ±5 V ±10 V	±250 mV ±500 mV ±1 V ±5 V ±10 V	±15 mV ±50 mV ±100 mV ±500 mV ±1 V ±2.5 V	-	-	-		
	Current Input	-	±20 mA*	±20 mA*	±20 mA*	-	-	-		
	Direct Sensor Input	Pt or Ni RTD	-	-	J, K, T, E, R, S, B	-	-	-		
Analog Output	**Resolution**	-	-	-	-	12 bit	-	-		
	Voltage Output	-	-	-	-	0~10 V	-	-		
	Current Output	-	-	-	-	0~20 mA 4~20 mA	-	-		
Digital Input and Digital Output	**Digital Input Channels**	-	-	-	-	-	16 DIO (bit-wise selectable)	16	16 W/LED	16 W/LED
	Digital Output Channels	-	-	-	-	-		-		
Counter (32-bit)	**Channels**	-	-	-	-	-	-	-		
	Input Frequency	-	-	-	-	-	-	-		
	Mode	-	-	-	-	-	-	-		
COMM	**Channels**	-	-	-	-	-	-	-	-	
	Type	-	-	-	-	-	-	-	-	
Isolation		3000 V_{DC}	3000 V_{DC}	3000 V_{DC}	3000 V_{DC}	3000 V_{DC}	-	-		2500 V_{DC}

Module		ADAM-5052	ADAM-5055S	ADAM-5056	ADAM-5056D	ADAM-5056S	ADAM-5060	ADAM-5068	ADAM-5080	ADAM-5090
Analog Input	**Resolution**	-		-			-	-	-	-
	Input Channel	-		-			-	-	-	-
	Sampling Rate	-		-			-	-	-	-
	Voltage Input	-		-			-	-	-	-
	Current Input	-		-			-	-	-	-
	Direct Sensor Input	-		-			-	-	-	-
Analog Output	**Resolution**	-		-			-	-	-	-
	Voltage Output	-		-			-	-	-	-
	Current Output	-		-			-	-	-	-
Digital Input and Digital Output	**Digital Input Channels**	8	8	-			-	-	-	-
	Digital Output Channels	-	8	16	16 W/LED	16	6 relay (2 form A 4 form C)	8 relay (8 form A)	-	-
Counter (32-bit)	**Channels**	-		-			-	-	4	-
	Input Frequency	-		-			-	-	5000 Hz (max)	-
	Mode	-		-			-	-	Frequency, Up/Down Counter, Bi-direction Counter	-
COMM	**Channels**	-		-	-		-	-	-	4
	Type	-		-	-		-	-	-	RS-232
Isolation		5000 V_{RMS}	2500 V_{DC}	-	-	2500 V_{DC}	-	-	1000 V_{RMS}	-

Table 2-2: I/O Modules Selection Guide

2-2 Selecting Power Supply

ADAM-5000/TCP system works under unregulated power source between +10 and +30 VDC. When you arrange different I/O modules on ADAM-5000/TCP's back plant, it may require comparable power supply. Use the following steps as guidelines for selecting a power supply for your ADAM-5000/TCP system.

- Refer to table 2.3 to check the power consumption of ADAM-5000/TCP main unit and each I/O module.

Main	**Description**	**Power Consumption**
ADAM-5000/485	Distributed Data Acquisition and Control System based on RS-485	1.0 W
ADAM-5000E	Distributed Data Acquisition and Control System based on RS-485	4.0 W
ADAM-5000/TCP	Distributed Data Acquisition and Control System based on Ethernet	5.0 W
ADAM-5510	PC-Based Programmable Controller (With Battery Backup)	1.0 W
ADAM-5511	PC-Based Programmable Controller With Modbus	1.0 W
I/O Modules	**Description**	**Power Consumption**
ADAM-5013	3-Channel RTD Input Module	1.1 W
ADAM-5017	8-Channel Analog Input Module (mV, mA or High Volrage)	1.25 W
ADAM-5017H	8-Channel High speed Analog Input Module (mV, mA or High Volrag)	2.2 W
ADAM-5018	7-Channel Thermocouple Input Module (mV, mA, Thermocouple)	0.63 W
ADAM-5024	4-Channel Analog Output Module (V, mA)	2.9 W
ADAM-5050	16-Channel Universal DIO	1.2 W
ADAM-5051	16-Channel Digital Input Module	0.53 W
ADAM-5051	16-Channel Digital Input Module	0.53 W
ADAM-5051D	16-Channel Digital Input W/LED Module	0.84 W
ADAM-5051S	16-Channel Isolated Digital Input W/LED Module	0.8 W
ADAM-5052	8-Channel Isolated DI	0.27 W
ADAM-5055S	16-Channel Isolated Digital I/O W/LED Module	0.68 W
ADAM-5056	16-Channel Digital Output Module	0.53 W
ADAM-5056D	16-Channel Digital Output W/LED Module	0.84 W
ADAM-5056S	16-Channel Isolated Digital Output W/LED Module	0.6 W
ADAM-5060	6-Channel Relay Output Module (2 of Form A, 4 of Form C)	1.8 W
ADAM-5068	8-Channel Relay Output Module (8 of Form A)	1.8 W
ADAM-5069	8-Channel Power Relay Output Module (4 of Form A & 4 of Form C)	2.2W
ADAM-5080	4-Channel Counter/Frequency Input Module	1.5 W
ADAM-5090	4-Port RS-232 Module	0.6 W

Table 2-3: Power Consumption of ADAM-5000 series

, Calculate the Summary of the whole system's power consumption. For example, there are following items in your system.

ADAM-5000/TCP * 3 & ADAM-5024 * 4 & ADAM-5017 * 6 & ADAM-5068 * 5 & ADAM-5050 * 5 & ADAM-5080 * 4

ò

The power consumption is:

5W * 3 + 2.9W * 4 + 1.25 * 6 + 1.8W * 5 + 1.2W * 5 + 1.5W * 4 = 55.1W

ƒ Selet a suitable power supply from Table2.4 or other comparable power resource for system operation

Specification	PWR-242	PWR-243	PWR-244
Input			
Input Voltage	90~264 V_{AC}	85~132 V_{AC} 170~264 V_{AC}	100~240 V_{AC}
Input Frequency	47~63 Hz	47~63 Hz	47~63 Hz
Input Current	1.2 A max.	1.4 A max.	25 A/110 V_{AC} 50 A/220 V_{AC} (Inrush current)
Short Protection	Yes	Yes	Yes
Output			
Output Voltage	+24 V_{DC}	+24 V_{DC}	+24 V_{DC}
Output Current	2.1 A	3 A	4.2 A
Overload Protection	Yes	Yes	Yes
General			
Dimension	181 mm x 113 mm x 60 mm (L x W x H)	181 mm x 113 mm x 60 mm (L x W x H)	181 mm x 113 mm x 60 mm (L x W x H)
Operating Temperature	0~50º C (32~122º F)	0~50º C (32~122º F)	0~50º C (32~122º F)
DIN-rail Mountable	Yes	No	No

Table2-4: Power Supply Specification Table

2-3 Selecting Link Terminal and Cable

Ethernet Network

Use the RJ-45 connector to connect the Ethernet port of the ADAM-5000/TCP to the Hub. The cable for connection should be Category 3 (for 10Mbps data rate) or Category 5 (for 100Mbps data rate) UTP/STP cable, which is compliant with EIA/TIA 586 specifications. Maximum length between the Hub and any ADAM-5000/TCP is up to 100 meters (approx. 300 ft).

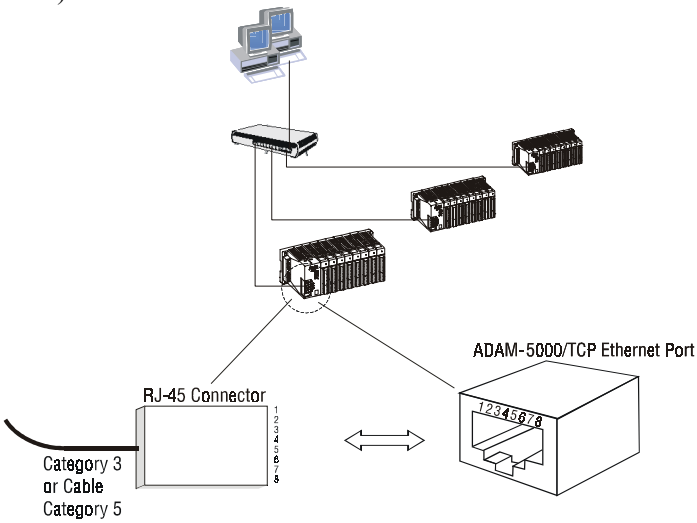

Figure 2-2: Ethernet Terminal and Cable Connection

Pin number	Signal	Function
1	RD+	Receive (+)
2	RD-	Receive (-)
3	TD+	Transmit (+)
4	(Not Used)	-
5	(Not Used)	-
6	TD-	Transmit (-)
7	(Not Used)	-
8	(Not Used)	-

Table 2-5: Ethernet RJ-45 port Pin Assignment

Serial Network

The system uses screw terminal for RS-485 twisted pair connection as a data gateway between Ethernet Sever and serial Modbus devices. See Figure 2-3. The following information must be considered.

1. Twisted-pair wire compliant with EIA-422 or EIA-485 standards, which contains 24 AWG thin copper conductor with copper mesh and aluminum foil for shielding.
2. Always use a continuous length of wire, do not combine wires to attain needed length.
3. Use the shortest possible wire length.
4. Use the wire trays for routing where possible.
5. Avoid running wires near high energy wiring.
6. To reduce electrical noise, it should be twisted as tightly as possible.

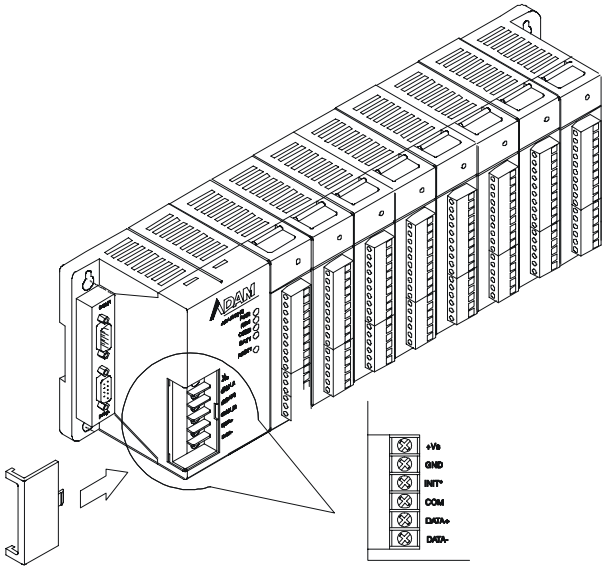

Figure 2-3 RS-485 Terminal and Cable Connection

2-4 Selecting Operator Interface

To complete your data acquisition and control system, selecting the operator interface is necessary. Adopting by Modbus/TCP Protocol, ADAM-5000/TCP exhibits high ability in system integration for various applications.

If you want to configure your ADAM-5000/TCP system, or monitor current status, Advantech offers free charge software:

- ADAM-5000/TCP Windows Utility

If you want to integrate ADAM-5000/TCP with HMI (Human Machine Interface) software in a SCADA (Supervisory Control and Data Acquisition) system. There are a lot of HMI software packages, which support Modbus/TCP driver.

- Advantech Studio
- Wonderware InTouch
- Intellution Fix of i-Fix
- Any other software support Modbus/TCP protocol

Moreover, Advantech also provides OPC Server, the most easy-to-use data exchange tool in worldwide. Any HMI software designed with OPC Client would be able to access ADAM-5000/TCP system.

- Modbus/TCP OPC Server

If you want to develop your own application, the DLL driver and OCX component will be the best tools to build up user's operator interface.

- ADAM-5000/TCP DLL driver
- ADAM-5000/TCP OCX component

With these ready-to-go application software packages, tasks such as remote data acquisition, process control, historical trending and data analysis require only a few keystrokes.

Chapter 3
Hardware Installation Guide

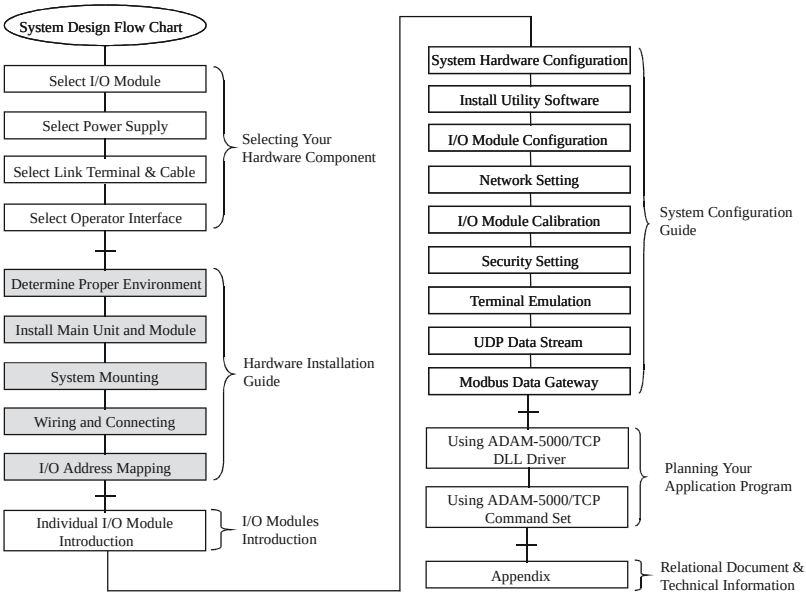

Using this Chapter

3-1 Determining the proper environment

Before you start to install the ADAM-5000/TCP system, there are something needed to check.

3-1-1 Check the content of shipping box

Unpack the shipping boxes and make sure that the contents include:

- ADAM-5000/TCP main unit with two blank slot covers
- ADAM-4000/5000 Products Utility CD

3-1-2 System Requirement

- Host computer
  - IBM PC compatible computer with 486 CPU (Pentium is recommended)
  - Microsoft 95/98/2000/NT 4.0 (SP3 or SP4) or higher versions
  - At least 32 MB RAM
  - 20 MB of hard disk space available
  - VGA color monitor
  - 2x or higher speed CD-ROM
  - Mouse or other pointing devices
  - 10 or 100 Mbps Ethernet Card
- 10 or 100 Mbps Ethernet Hub (at least 2 ports)
- Two Ethernet Cable with RJ-45 connector
- Power supply for ADAM-5000/TCP (+10 to +30 V unregulated)

3-1-3 I/O modules

At least one I/O module is needed to use the system. Prepare the required I/O modules as the interface for a variety of field singles.

3-2 Installing your main unit and module

When inserting modules into the system, align the PC board of the module with the grooves on the top and bottom of the system. Push the module straight into the system until it is firmly seated in the back plane connector (see figure 3-1). Once the module is inserted into the system, push in the retaining clips located at the top and bottom of the module to firmly secure the module to the system (see figure 3-2).

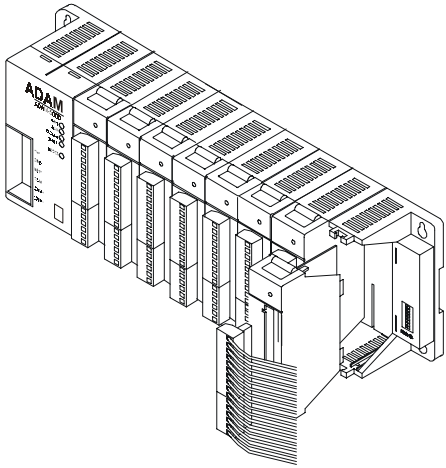

Figure 3-1: Module alignment and installation

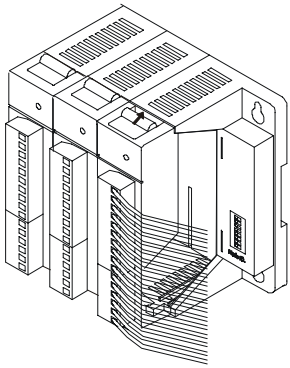

Figure 3-2: Secure the module to the system

3-3 Mounting

The ADAM-5000/TCP system can be installed on a panel or on a DIN rail.

3-3-1 Panel mounting

Mount the system on the panel horizontally to provide proper ventilation. You cannot mount the system vertically, upside down or on a flat horizontal surface. A standard #7 tatting screw (4 mm diameter) should be used.

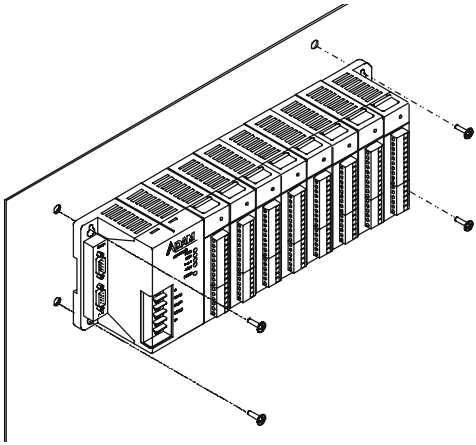

Figure 3-3: ADAM-5000/TCP panel mounting screw placement

3-3-2 DIN rail mounting

The system can also be secured to the cabinet by using mounting rails (see figure 3-4). If you mount the system on a rail, you should also consider using end brackets at each end of the rail. The end brackets help keep the system from sliding horizontally along the rail. This minimizes the possibility of accidentally pulling the wiring loose. If you examine the bottom of the system, you will notice two small retaining clips. To secure the system to a DIN rail, place the system on to the rail and gently push up on the retaining clips (see figure 3-5). The clips lock the system on the rail. To remove the system, pull down on the retaining clips, lift up on the base slightly, and pull it away from the rail.

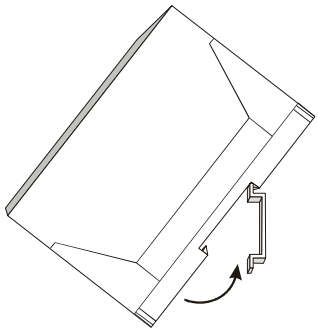

Figure 3-4: ADAM-5000/TCP DIN rail mounting

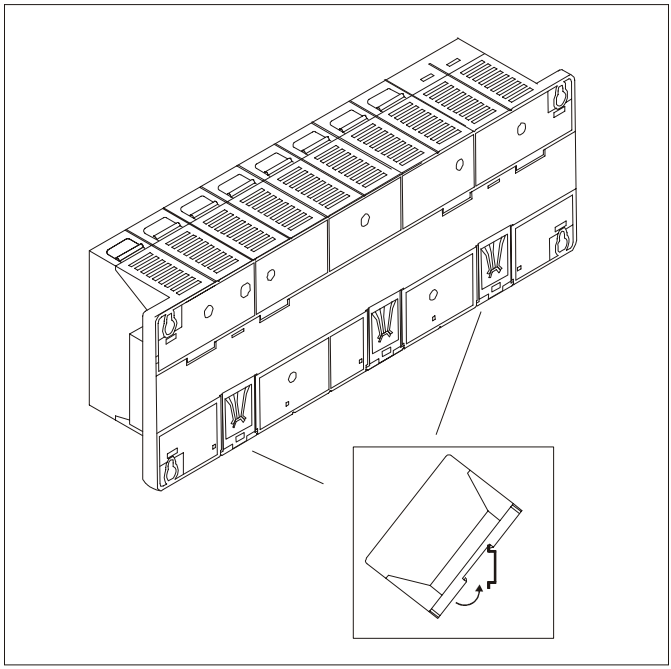

Figure 3-5: Secure ADAM-5000/TCP System to a DIN rail

3-4 Wiring and Connections

This section provides basic information on wiring the power supply, I/O units, and network connection.

3-4-1 Power supply wiring

Although the ADAM-5000/TCP systems are designed for a standard industrial unregulated 24 V DC power supply, they accept any power unit that supplies within the range of +10 to +30 VDC. The power supply ripple must be limited to 200 mV peak-to-peak, and the immediate ripple voltage should be maintained between +10 and +30 VDC. Screw terminals +Vs and GND are for power supply wiring.

Note: The wires used should be sized at least 2 mm.

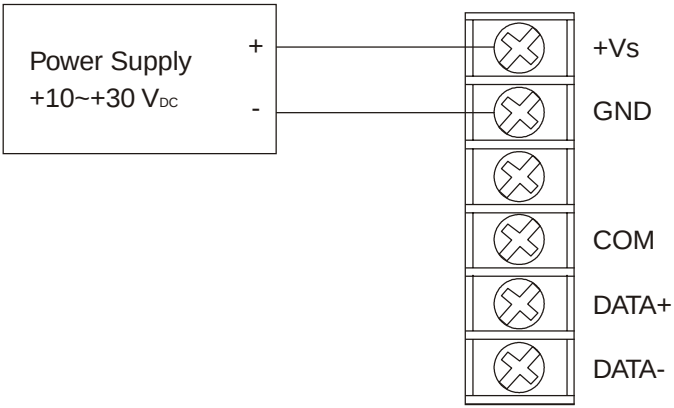

Figure 3-6: ADAM-5000/TCP power wiring

3-4-2 I/O modules wiring

The system uses a plug-in screw terminal block for the interface between I/O modules and field devices. The following information must be considered when connecting electrical devices to I/O modules.

1. The terminal block accepts wires from 0.5 mm to 2.5 mm.
2. Always use a continuous length of wire. Do not combine wires to make them longer.
3. Use the shortest possible wire length.
4. Use wire trays for routing where possible.
5. Avoid running wires near high-energy wiring.
6. Avoid running input wiring in close proximity to output wiring where possible.
7. Avoid creating sharp bends in the wires.

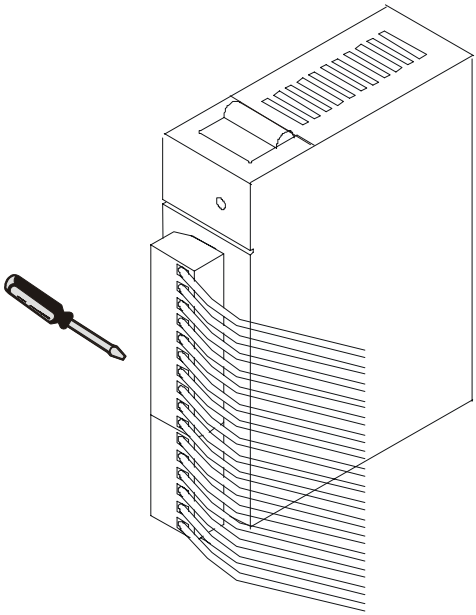

Figure 3-7: ADAM-5000 I/O Module Terminal Block wiring

3-4-3 System Network Connections

Ethnet Network

The ADAM-5000/TCP has an Ethernet communication port allowed you to program, configure, monitor, and integrate into the SCADA system. The figure 3-8 is a guideline to complete the system network connection.

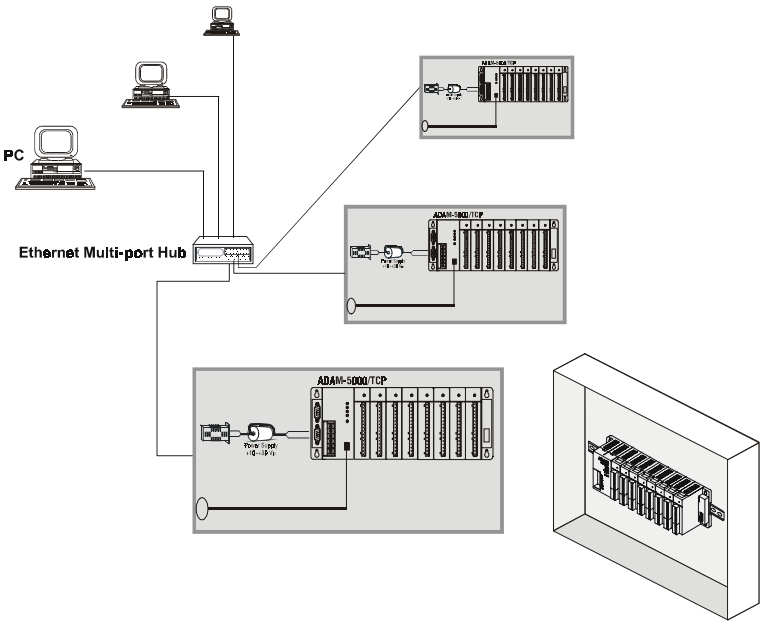

Figure 3-8: System network connection

Serial Network

Working as an Ethernet Data Gateway, the ADAM-5000/TCP provides an RS-485 interface to integrate serial devices for various applications. Adopting by Modbus standard protocol, it solves the communication problem between different networks and different devices. Mean while, users can extend their system scope by integrating up to 32 nodes of ADAM-5511 or other Modbus products, such as meters, card readers, loadcell, and so on.

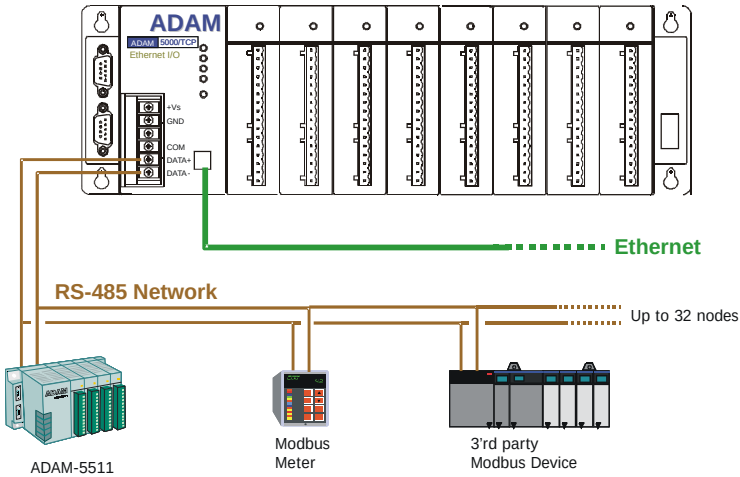

Figure 3-9 Serial Network Connection

Note: The address of ADAM-5000/TCP on the RS-485 network will be always node 1. Any Modbus devices integrated in this network should be addressed from node 2 to 33.

3-5 Assigning address for I/O Modules

Basing on Modbus standard, the addresses of the I/O modules you place into the ADAM-5000/TCP system are defined by a simple rule. Please refer the figures 3-9 to map the I/O address.

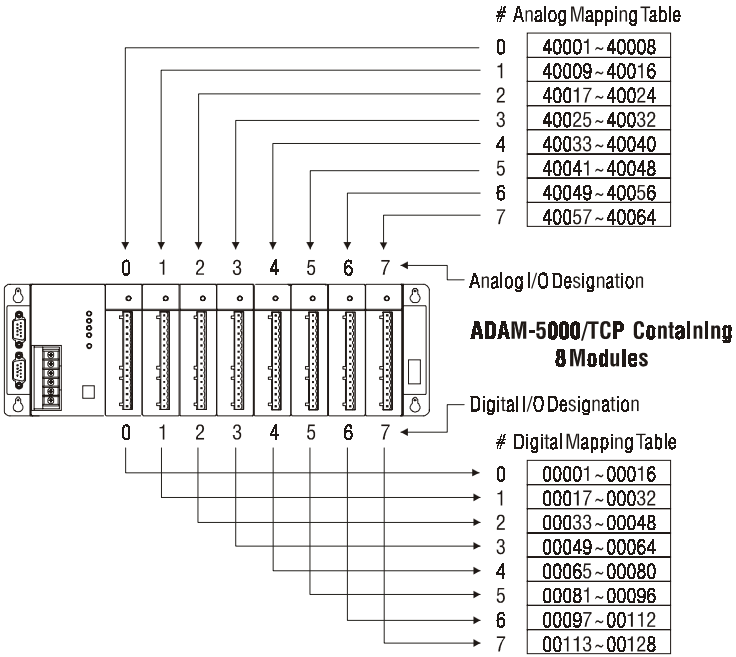

Figure 3-10: I/O Modules Address Mapping

For example, if there is a ADAM-5024 (4-channel AO Module) in slot 2, the address of this module should be 40017~40020.

Note: ADAM-5080 is a special 4-channel counter module. The data type is designed as "unsigned long". When you insert an ADAM-5080 in slot 0, the address should be 40001, 40003, 40005 and 40007.

4

I/O modules

This manual introduces the detail specifications functions and application wiring of each ADAM-5000 I/O modules. To organize an ADAM-5000 series and ADAM-5510 Series Controller, you need to select I/O modules to interface the main unit with field devices or processes that you have previously determined. Advantech provides 20 types of ADAM-5000 I/O modules for various applications so far. Following table is the I/ O modules support list we provided for user's choice. **More detailed specification and user's guides, please refer the user's manual of ADAM-5000 IO Module**. It had integrated and collected this information.

Module	Name	Specification	Reference
Analog I/O	ADAM-5013	3-ch. RTD input	Isolated
	ADAM-5017	8-ch. AI	Isolated
	ADAM-5017H	8-ch. High speed AI	Isolated
	ADAM-5018	7-ch. Thermocouple input	Isolated
	ADAM-5024	4-ch. AO	Isolated
Digital I/O	ADAM-5050	7-ch. D I/O	Non-isolated
	ADAM-5051	16-ch. DI	Non-isolated
	ADAM-5051D	16-ch. DI w/LED	Non-isolated
	ADAM-5051S	16-ch. Isolated DI w/LED	Isolated
	ADAM-5052	8-ch. DI	Isolated
	ADAM-5055S	16-ch. Isolated DI/O w/LED	Isolated
	ADAM-5056	16-ch. DO	Non-isolated
	ADAM-5056D	16-ch. DO w/LED	Non-isolated
	ADAM-5056S	16-ch. Isolated DO w/LED	Isolated
	ADAM-5056SO	16-ch. Iso. DO w/LED (source)	Isolated
Relay Output	ADAM-5060	6-ch. Relay output	Isolated
	ADAM-5068	8-ch. Relay output	Isolated
	ADAM-5069	8-ch. Relay output	Isolated
Counter/Frequency	ADAM-5080	4-ch. Counter/Frequency	Isolated
Serial I/O	ADAM-5090	4-port RS232	Non-isolated

Table 4-1: I/O Module Support List

Chapter 5
System Hardware Configuration

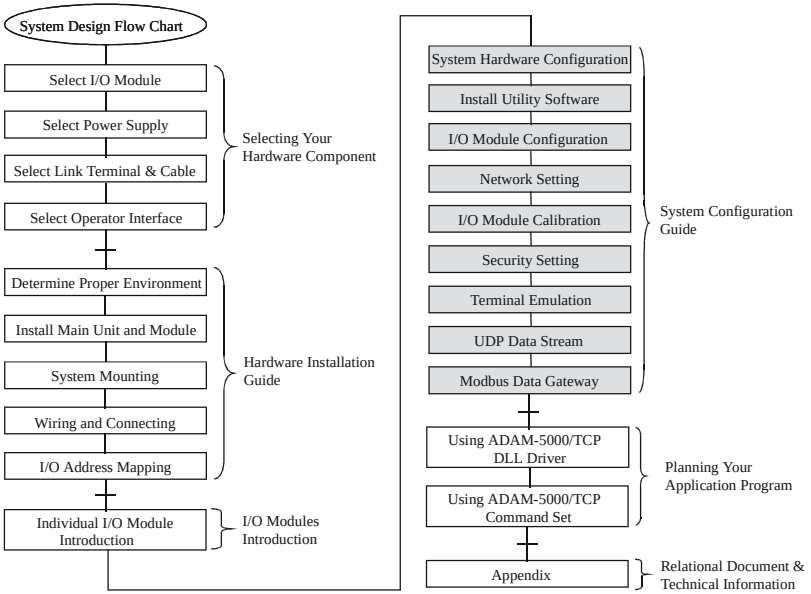

Using this Chapter

This chapter explains how to use Windows Utility to configure the ADAM-5000/TCP system for various applications. Users can learn the hardware connection, software installation, communication setting and every procedure for system configuration from these sections.

5-1 System Hardware Configuration

As we mentioned in chapter 3-1, you will need following items to complete your system hardware configuration.

System Requirement

- Host computer
  - IBM PC compatible computer with 486 CPU (Pentium is recommended)
  - Microsoft 95/98/2000/NT 4.0 (SP3 or SP4) or higher versions
  - At least 32 MB RAM
  - 20 MB of hard disk space available
  - VGA color monitor
  - 2x or higher speed CD-ROM
  - Mouse or other pointing devices
  - 10 or 100 Mbps Ethernet Card
- 10 or 100 Mbps Ethernet Hub (at least 2 ports)
- Two Ethernet Cable with RJ-45 connector
- Power supply for ADAM-5000/TCP (+10 to +30 V unregulated)

Make sure to prepare all of the items above, then connect the power and network wiring as figure 5-1.

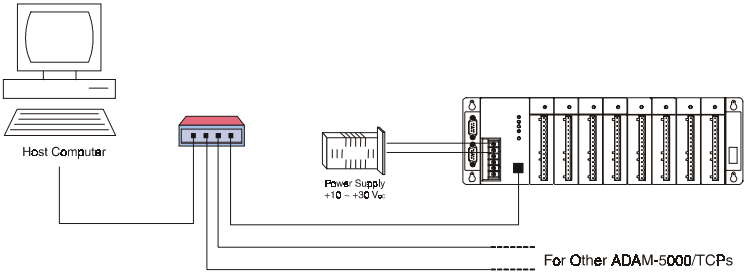

Figure 5-1: Hardware Configuration

5-2 Install Utility Software on Host PC

ADAM-5000/TCP Systems come packaged with a Utility CD, containing ADAM Product series Utilities as system configuration tool. While you Insert the CD into the CD drive (e.g. D:) of the host PC, the Utility software setup menu will start up automatically.

Click the ADAM-5000/TCP icon to execute the setup program. There will be a shortcut of the Utility executive program on Windows' desktop after completing the installation.

5-3 ADAM-5000/TCP Windows Utility Overview

The Windows Utility offers a graphical interface that helps you configure the ADAM-5000/TCP main unit and I/O modules. It is also very convenient to test and monitor your DA&C System. The following guidelines will give you some brief instructions on how to use this Utility.

- Main Menu
- Ethernet Network Setting
- Adding Remote Station
- I/O Module Configuration
- Alarm Setting
- I/O Module Calibration
- Firmware Update
- Security Setting
- Terminal emulation
- Data Stream
- RS-485 Modbus Network Setting

5-3-1 Main Menu

Double Click the icon of ADAM-5000/TCP Windows Utility shortcut, the Operation screen will pop up as Figure 5-2.

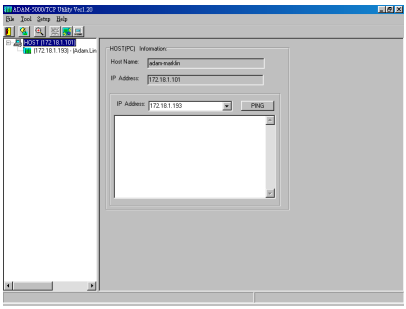

Figure 5-2: operation Screen

The top of the operation screen consists of a function menu and a tool bar for user's commonly operating functions.

Function menu

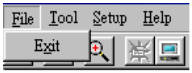

Item **File** contents "Exit" Function, using to exit this Utility program.

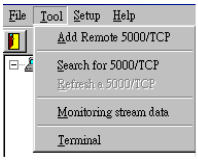

Item **Tool** contents functions as below:

Add Remote 5000/TCP : Create a new ADAM-5000/TCP located in other Ethernet domination, both available to local LAN and Internet application.

Search for 5000/TCP: Search all ADAM-5000/TCP units in the specific Ethernet domination. (the same with host PC's Ethernet domination)

Refresh 5000/TCP: Refresh the specific ADAM-5000/TCP unit to verify the system status.

Terminal: Call up the operation screen of Terminal emulation to do the request / response command execution.

Monitor Data Stream: Call up the monitoring screen of stream data from specific ADAM-5000/TCP.

Item **Setup** contents Timeout and Scan Rate setting functions. Please be aware of the time setting for other Ethernet domination usually longer than local network.

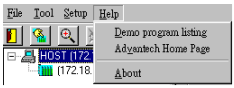

Item **About** contents information about software version, released date, and support modules.

Tool Bar

There are five push buttons in the tool bar.

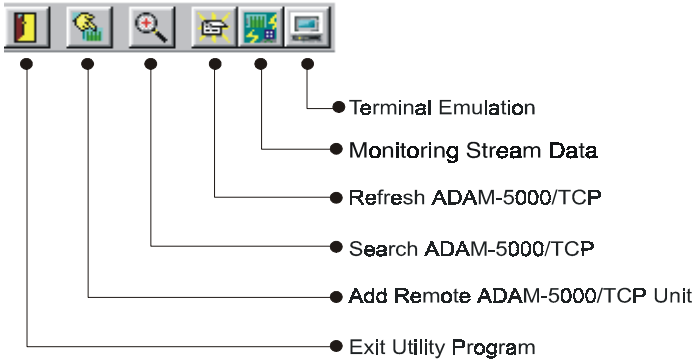

Figure 5-3: Tool Bar

5-3-2 Ethernet Network Setting

As the moment you start up this Windows Utility, it will search all ADAM-5000/TCP on the host PC's domination Ethernet network automatically. Then the tree-structure display area will appeal with the searched units and the relative IP address.

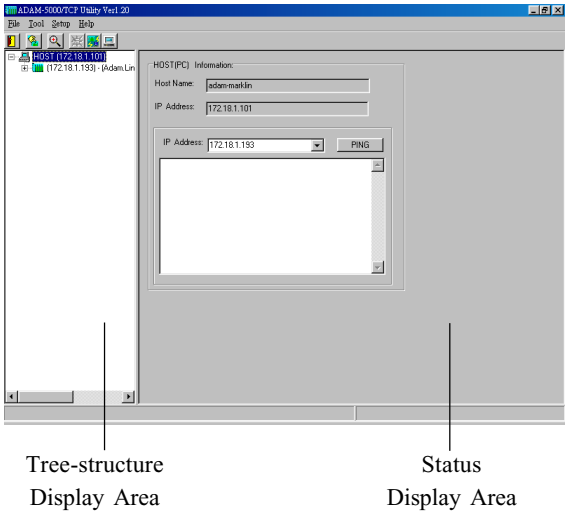

Figure 5-4: Network Setting

See Figure 5-4, there are also Host PC's information in the status display area, include host name and IP address. Moreover, the Windows Utility provides network connection test tool for user to verify whether the communication is workable. Key-in the specific IP address you want to connect and click the PING button, the testing result will show as Figure 5-5.

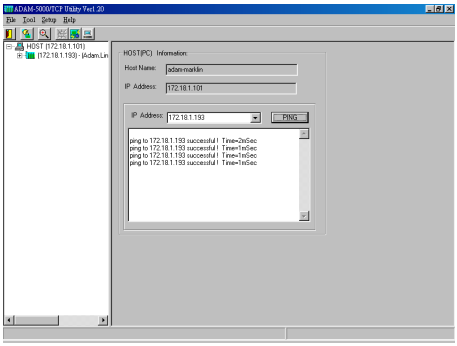

Figure 5-5: Communication testing function

Since Utility software detects the ADAM-5000/TCP, on the network, user can begin to setup each ADAM-5000/TCP station individually with following steps.

Step1: Choose any one station, all I/O modules plugged in the main unit will be listed on the tree-structure display area. Mean while, the "Device Name" and "Device Description" are editable by operator's needs.

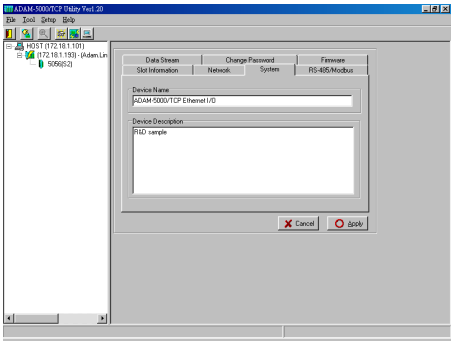

Figure 5-6: Define Device Name and Description

Step2: Click the Network tip to configure the TCP/IP network setting

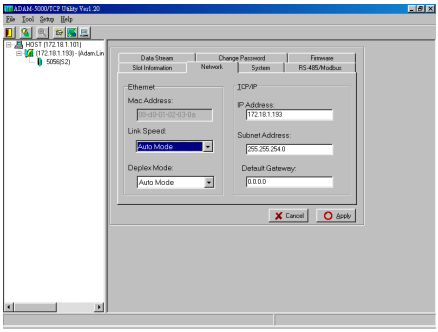

Figure 5-7: TCP/IP Network setting

MAC Address: This is also called Ethernet address and needs no further configuration.

Link Speed: This function will show the current linking speed to be either 10Mbps or 100Mbps. However, the utility will auto-detect the current transmission speed on the network segment and set the transmission speed for the device accordingly without your further efforts.

Duplex Mode: The utility will detect the current transmission mode (half-duplex or full-duplex) on the network segment, and set the transmission mode for the device accordingly without your further efforts.

IP Address, Subnet Mask, Default Gateway**:**

The IP address identifies your ADAM-5000/TCP device on the global network. Each ADAM-5000/TCP has same default IP address 10.0.0.1. Therefore, please do not initial many ADAM-5000/TCP at the same time to avoid the Ethernet collision.

If you want to configure the ADAM-5000/TCP in the host PC's dominating network, only the IP address and Subnet Mask will need to set (host PC and ADAM-5000/TCP must belong to same subnet Mask).

If you want to configure the ADAM-5000/TCP via Internet or other network domination, you have to ask your network administrator to obtain a specific IP and Gateway addresses then configure each ADAM-5000/TCP with the individual setting.

5-3-3 Add Remote Station

To meet the remote monitoring and maintenance requirements, ADAM-5000/TCP System does not only available to operate in local LAN, but also allowed to access from internet or intranet. Thus users would able to configure an ADAM-5000/TCP easily no matter how far it is.

Select item **Tool**\Add 5000/TCP in function menu or click the button, the adding station screen will pop up as Figure 5-8. Then key-in the specific IP address and click the **Add** button. If the communication success, the added ADAM-5000/TCP unit should appeal on the tree-structure display area.

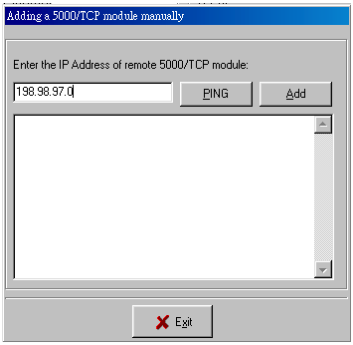

Figure 5-8: Adding ADAM-5000/TCP screen

Note: There are several conditions need to be sure before adding a remote ADAM-5000/TCP system in the windows Utility.

1. Be sure the specific IP is existed and available.
2. Be sure to complete the network linkage for both sides.
3. Be sure to adjust the best timing of timeout setting.
4. Even you are not sure whether the communication is workable or not, there is also a “PING” function for testing the network connection.

5-3-4 I/O Module Canfiguration

Digital Input Output Module

Selecting ADAM-5000 Digital Modules includes ADAM-5050/5051(D)/ 5051S/5052/5055S/5056(D)/5056S/5060/5068/5069, user can read following in- formation from the Utility.

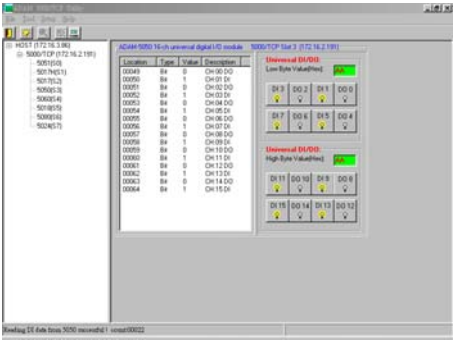

Figure 5-9: Digital I/O Module Configuration

Location: Standard Modbus address. Windows Utility shows the Modbus mapping address of each I/O channel. (Please re- fer to chapter 3-5 Assigning address for I/O Modules) And the addresses will be the indexes for applying into the data- base of HMI or OPC Server.

Type: Data Type of the I/O channel. The data type of Digital I/O modules is always “Bit”.

Value: The current status on each channel of I/O Module. The value of digital I/O modules could be “0” (OFF) or “1” (ON).

Description: Describes the channel numbers and I/O types of the specific module.

In addition to monitor the current DI/DO status, the Windows Utility offers a graphical operating interface as figure 5-10. You can read the Digital input status through the change of the indicator icons. Oppositely, you can write the digital output status through clicking the indicator icons.

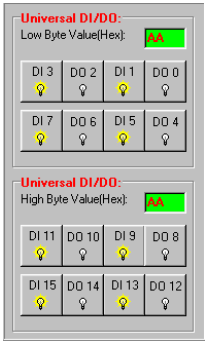

Figure 5-10: Operating and Indicating Icons

Note: 1. The indicator icons are only available to click for digital output channel.

2. The hexadecimal code will be calculated automatically for any status.

Analog Input Module

Selecting ADAM-5000 Analog Input Modules includes ADAM-5013/5017(H)/5018s, users can read following information from the Utility.

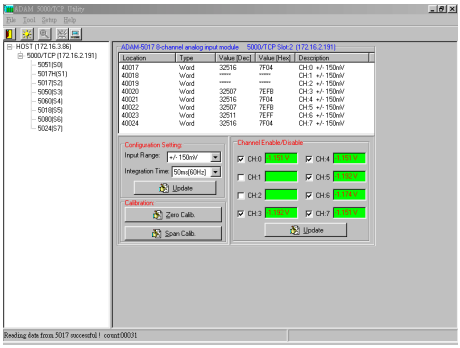

Figure 5-11: Current Analog Input Status

Location: Standard Modbus address. (Refer to chapter 3-5 Assigning address for I/O module)

Type: Data type of the I/O channel. The data type of analog Input modules is always "word".

Value: The current status on each channel of I/O modules. Windows Utility provides both decimal and hexadecimal values used for different applications.

Description: Describes the channel numbers, sensor types, and measurement range of the specified module.

Before acquiring the current data of an analog input module, you have to select the input range and integration time. Then the input data will be scaled as the specified range with engineer unit.

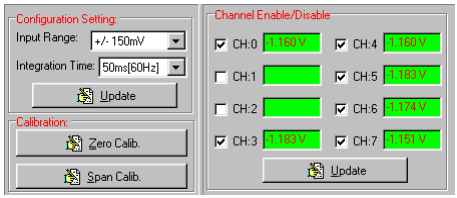

Figure 5-12: setting range and integration time

Note: Windows Utility allows user to Enable / Disable the current status display.

Analog Output Module

Selecting an ADAM-5024 Analog Output Module, users can certainly read the information about location, type, value, and Description. Actually, ADAM-5024 is designed with four different outputs channel, so there are four channel configuration screens for signal range and output value setting in the Utility. Once the setting value sends out, the system will read back the value immediately to guarantee a correct analog output signal.

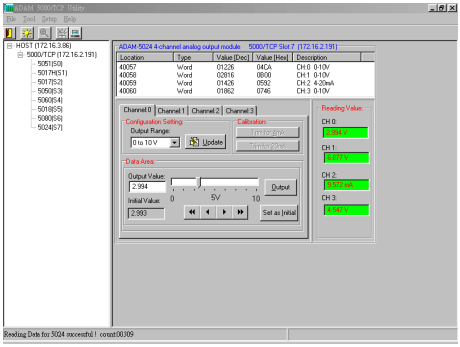

Figure 5-13: Analog Module Configuration Screen

Note: Initial Setting function:
Adjust a initial output value you want to set to the specified channel and click the **set as initial** button, the channel will output the same value each time when system is initial.

Counter/Frequency Module

Selecting an ADAM-5080 Counter/Frequency Module, users also can read the information about location, type, value, and description from four individual channel configuration screens.

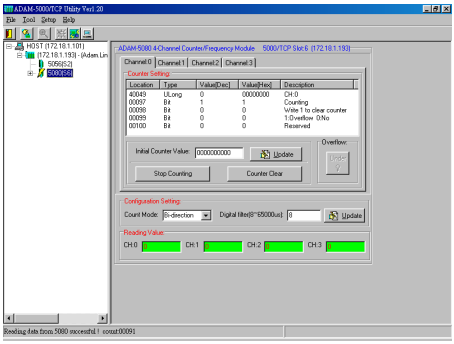

Figure 5-14: Counter/Frequency Module Configuration

However, the ADAM-5080 is a special module. Each channel is composed of an unsigned long and four bits.

For example, if there is a ADAM-5080 plugged in Slot 6 of ADAM-5000/TCP system, the address locations should be:

	Channel 0	Channel 1	Channel 2	Channel 3
Unsigned Long	40049	40051	40053	40055
1st Bit	00097	00101	00105	00109
2nd Bit	00098	00102	00106	00110
3rd Bit	00099	00103	00107	00111
4th Bit	00100	00104	00108	00112

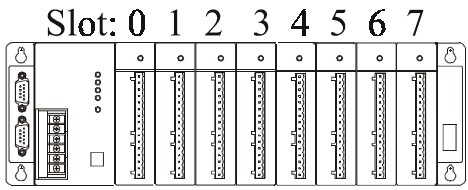

Figure 5-15: Location of Counter/Frequency Module

Note: 1st bit: Default ON “1”, available to set ON/OFF to start/stop counting.

2nd bit: Normal OFF “0”, only accept a pulse ON signal to clear the counter.

3rd bit: Normal OFF “0”, only tuig ON “1” when counter overflow. Users can write "0" to clear the overflow flag.

4th bit: Non used.

5-3-5 Alarm Setting

To satisfy the needs of various applications, ADAM-5000/TCP system provides Alarm setting function for Analog Input and Counter Module. Users can set High/Low limit value to identify the alarm status and trigger a digital output as an event handling function.

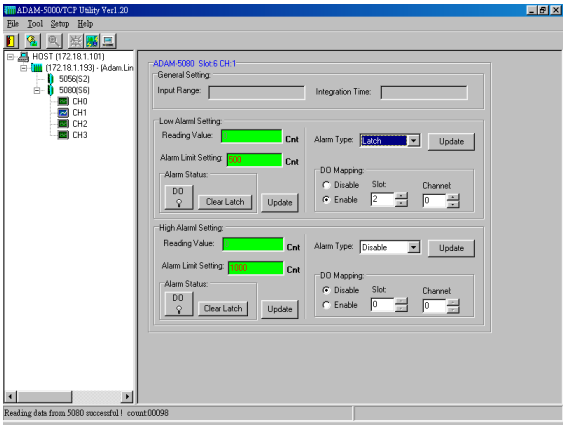

Figure 5-16: Alarm Setting for Analog Input and Counter Modules

There are three alarm types in Analog Input Modules:

Disable: ADAM-5000/TCP dose not executive alarm diagnosing function.

Momentary: When the Input value is over or under the High/Low limit, the alarm signal will be sent only once.

Latch: When the input value is over or under the High/Low limit, the alarm signal will be latched till clicking the “Clear Latch” button.

Note: The alarm types of ADAM-5080 include “Disable” and “Latch only.

5-3-6 I/O Module Calibration

Calibration is to adjust the accuracy of ADAM module. There are several modes for module's calibration: Zero calibration, Span calibration, CJC calibration, and Analog Output calibration. Only analog input and output modules can be calibrated, includes ADAM-5013, 5017, 5017H, 5018 and 5024.

Zero Calibration

1. Apply power to the module and let it warm up for 30 minutes.
2. Make sure the module is correctly installed and properly configured for the input range you want to calibrate.
3. Use a precision voltage source to apply a calibration voltage to the V+ and V- terminals of the ADAM-5013, 5017, 5017H, and 5018 modules.
4. Click the Execute button.

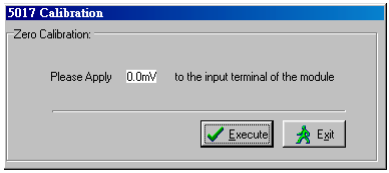

Figure 5-17: Zero Calibration

Span Calibration

Follow the same procedure of zero calibration and click the Execute button.

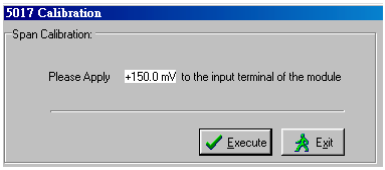

Figure 5-18: Span Calibration

CJC Calibration

1. Prepare an accurate voltage source.
2. Run the zero calibration and span calibration function.
3. Use a temperature emulation device (such as Micro-10) to send a temperature signal to the ADAM module and then compare this signal with the value from the ADAM module. If the value is different from the signal, adjust the CJC value to improve it.

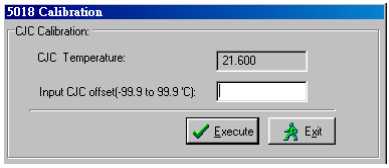

Figure 5-19: CJC Calibration

Note: CJC (cold junction sensor) calibration only applies to the ADAM-5018

Analog Output Calibration

- ADAM 5024: 4 mA and 20 mA

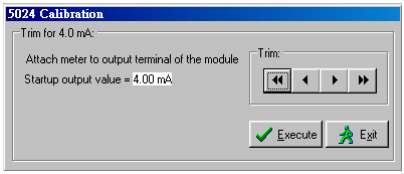

Figure 5-20: Analog Output Module Calibration

5-3-7 Firmware Update

ADAM-5000/TCP supports all ADAM-5000 series I/O modules and necessary operating function so far. But Advantech always provides better hardware and software functions to improve the perfect DA&C systems. Therefore, users will need to upgrade the firmware of ADAM-5000/TCP sometime.

Select the Firmware Upgrade tab and click **Browsing** to find the specific firmware (*.bin) for upgrade.

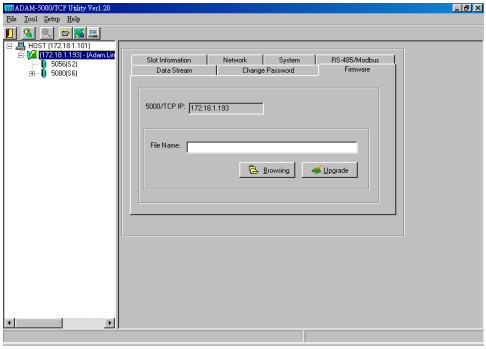

Figure 5-21: Firmware Upgrade

Click the upgrade button, then the new firmware will be downloaded into the ADAM-5000/TCP system.

5-3-8 Security Setting

Though the technology of Ethernet discovered with great benefits in speed and integration, there also exist risk about network invading form anywhere. For the reason, the security protection design has built-in ADAM-5000/TCP system. Once user setting the password into the ADAM-5000/TCP firmware, the important system configurations (Network, Firmware, Password) are only allowed to be changed by password verification.

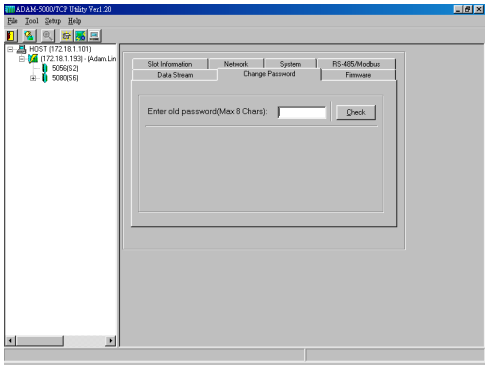

Figure 5-22: Password Setting

Note: The default password of ADAM-5000/TCP is "**00000000**". Please make sure to keep the correct password by yourself. If you lose it, please contact to Advantech's technical support center for help.

5-3-9 Terminal Emulation

You can issue commands and receive response by clicking the Terminal button on the tool bar. There are two kinds of command format supported by this emulating function. Users can choose ASCII or Hexadecimal mode as their communication base. If the ASCII mode has been selected, the Windows Utility will translate the request and response string both in Modbus and ASCII format. Please refer Chapter 6-2 to use Modbus Command; and refer Chapter 6-4 to apply ASCII command.

For example, select ASCII mode and key-in the ASCII command "$01M" (read module name), then click **Send**. The response will show as figure 5-23.

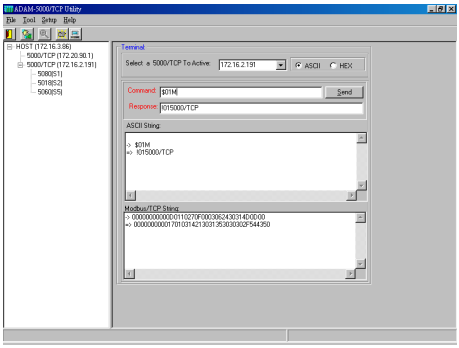

Figure 5-23: Command Emulation

5-3-10 Data Stream

Data Stream Configuration

In addition to TCP/IP communication protocol, ADAM-5000/TCP supports UDP communication protocol to regularly broadcast data to specific host PCs.

Click the tip of Data stream, then configure the broadcasting interval and the specific IPs which need to receive data from the specific ADAM-5000/TCP. This UDP Data Stream function broadcasts up to 8 host PCs simultaneously, and the interval is user-defined from 50ms to 7 Days.

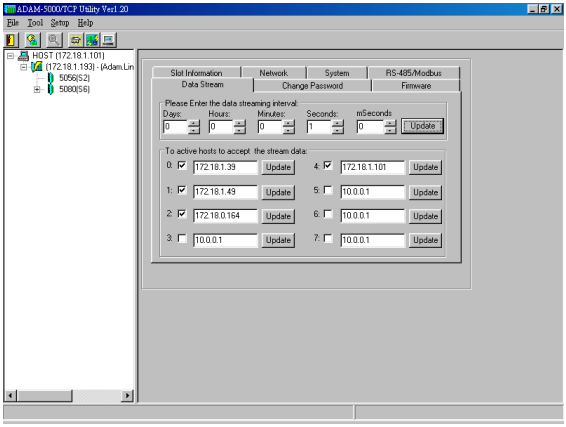

Figure 5-24: Data Stream Configuration

Data Stream Monitoring

After finishing the configuration of Data Stream, you can select the item "Monitor Data Stream" in the function bar or click icon to call up operation display as Figure 5-25.

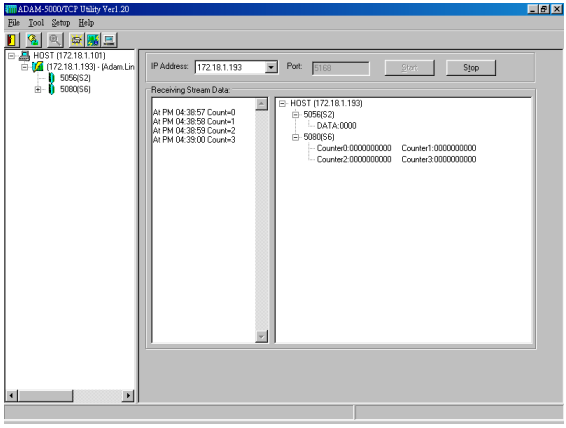

Figure 5-25: Data Stream Monitoring

Select the IP address of the ADAM-5000/TCP you want to read data, then click “Start” button. The Utility software will begin to receive the stream data on this operation display.

5-3-11 Data Gateway Setting

ADAM-5000/TCP is designed with an RS-485 Modbus Interface. As a Data Gateway, It integrates serial Modbus devices into Ethernet application easily.

Click the tip of "RS-485/Modbus" to configure the RS-485 network setting with following steps.

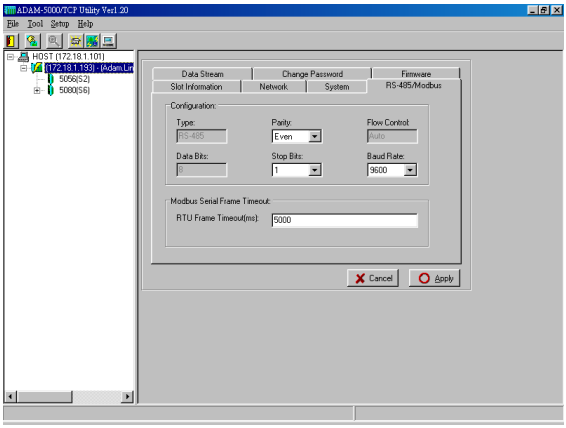

Figure 5-26: RS-485 Modbus Network Setting

1. Define the parameter of the network, includes Parity, stop bit, Baud Rate (300~115200bps),and Timeout.
2. Click the Apply button, the password verification dialog block will pop up.
3. Key in your specific password and click "OK", The setting is done.

Chapter 6
Planning Your Application Program

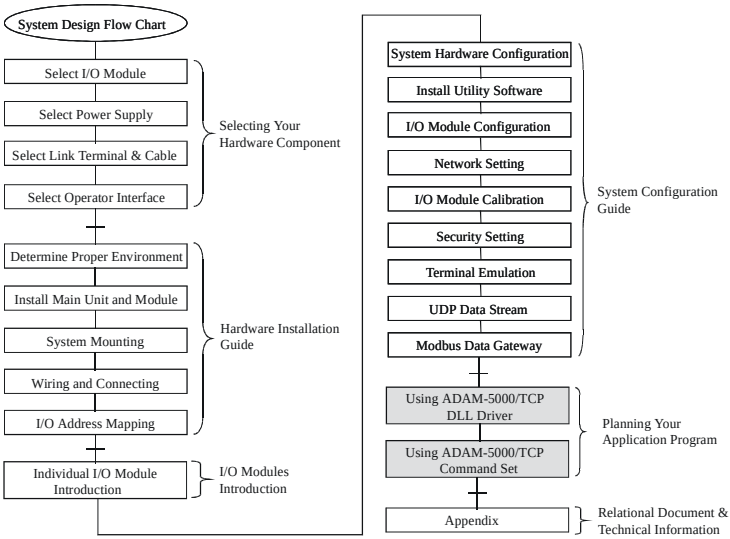

Using this Chapter

6-1 Introduction

After completing the system configuration, you can begin to plan the application program. This chapter introduces two programming tools for users to execute system data acquisition and control. The DLL drivers and command sets provide a friendly interface between your applications and ADAM-5000/TCP system.

6-2 DLL (Dynamic Link Library) Driver

The Dynamic Link Library (DLL) enables you to quickly and easily write Windows applications for ADAM-5000/TCP systems. The library supports Borland C, Delphi, Visual C++, and Visual Basic. Since

ADAM-5000/TCP systems communicate with a host computer through Ethernet, no additional driver needs to be installed. The DLL includes all necessary function calls to utilize the ADAM-5000/TCP systems to their fullest extent.

In the same path with "ADAM 5000TCP"after completing S/W installation, you'll find the relational example files for each kind of programming languages after setup the Windows Utility program. You can customize the source code to create your own tailor-made ADAM-5000/TCP setup program or monitoring system.

6-2-1 Index

6-2-2 Programming Flow

* Send a command and receiving response by UDP

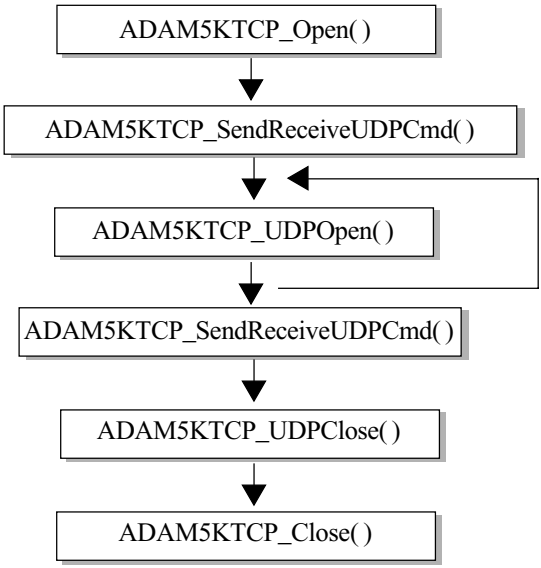

* Send a command and receiving response by TCP

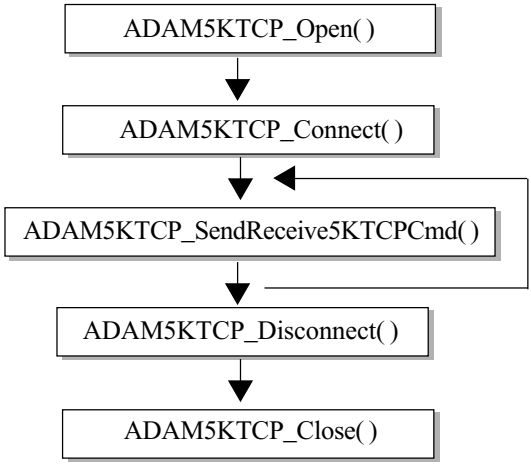

* To receive stream data coming from ADAM-5000/TCP(s)

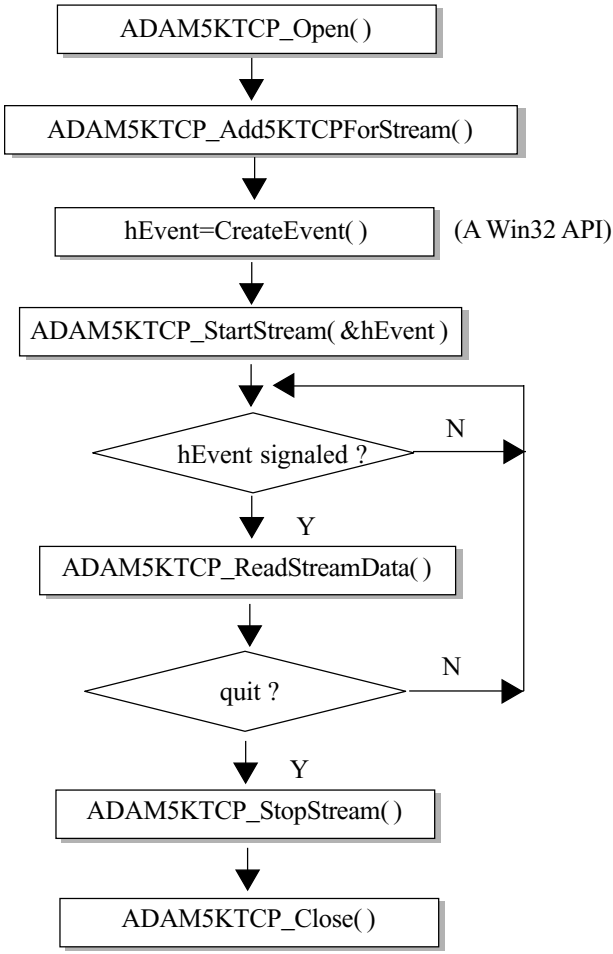

* To receive alarm information from ADAM-5000/TCP(s)

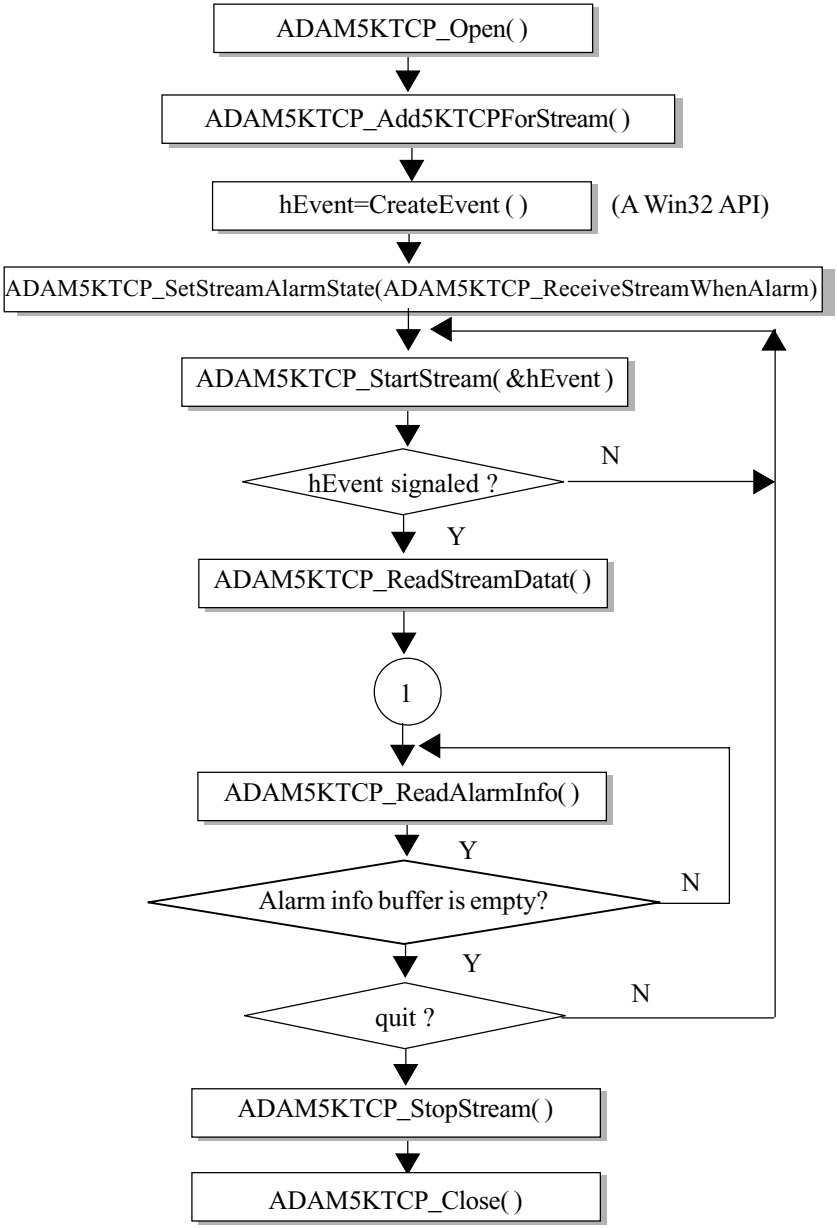

* To read coil values

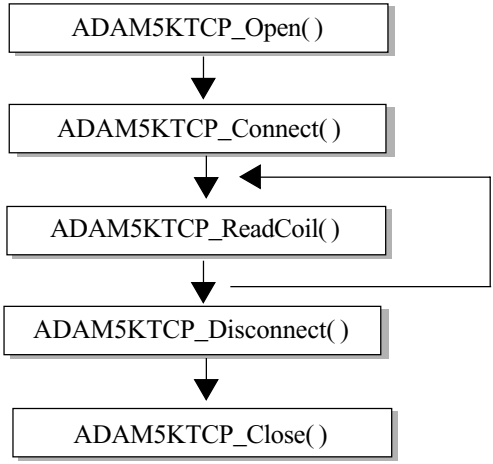

* To write value to coil

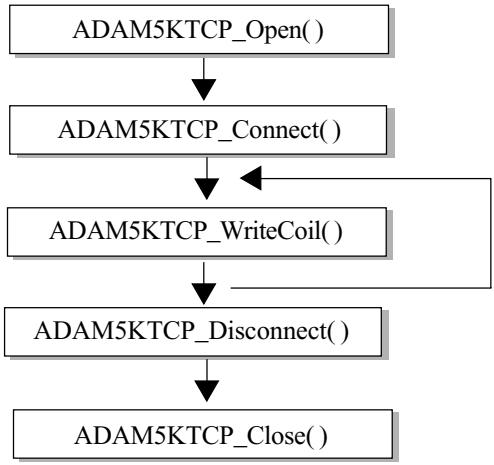

* To read holding register value

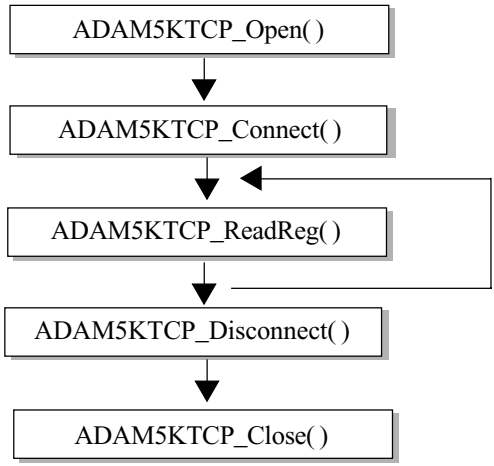

**** To write value to holding register***

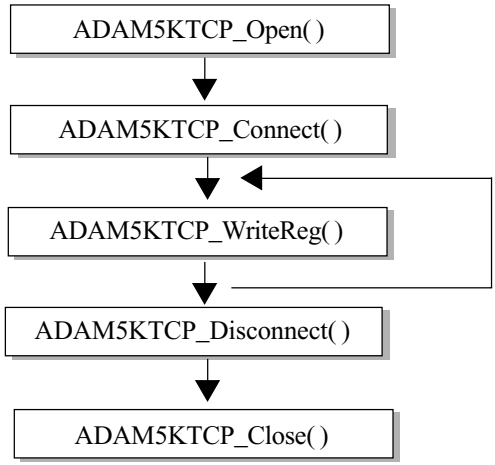

6-2-3 Function Descriptions

ADAM5KTCP_Open

Description: Initiate the “adam5ktcp.dll” for using.

Syntax: int ADAM5KTCP_Open(void);

Parameters: void

Return: Please refer to Chapter6-2-4 “Return Codes” for more detail information

ADAM5KTCP_Close

Description: Terminates using the "adam5ktcp.dll".

Syntax: void ADAM5KTCP_Close(void);

Parameters: void

Return: void

ADAM5KTCP_Connect

Description: Establish a Windows Sockets connection in a specified ADAM-5000/TCP system.

Syntax: int ADAM5KTCP_Connect(char szIP[ ], unsigned short port, int iConnectionTimeout, int iSendTimeout, int iReceiveTimeout);

Parameter:

szIP[in]: the IP Address of the ADAM-5000/TCP that to be connected

port[in]: the TCP/IP connection port used with Modbus/TCP, 502 default

iConnectionTimeout[in]: the specified timeout interval for connecting to the ADAM-5000/TCP

iSendTimeout[in]: the specified timeout interval for sending a command to the ADAM-5000/TCP

iReceiveTimeout[in]: the specified timeout interval for receiving response from the ADAM-5000/TCP

Return: Please refer to Chapter 6-2-4 “Return Codes” for more detail information

ADAM5KTCP_Disconnect

Description: Disconnect the Windows Sockets connection of the specified ADAM-5000/TCP

Syntax: void ADAM5KTCP_Disconnect(void);

Parameter: void

Return: Please refer to Chapter 6-2-4 "Return Codes" for more detail information

DAM5KTCP_GetDLLVersion

Description: Read the version of ADAM-5000/TCP DLL driver

Syntax: int ADAM5KTCP_GetDLLVersion(void);

Parameter: void

Return: 0x150 means Version 1.50

ADAM5KTCP_ReadReg

Description: Reads the holding register value at a specified range described in parameters.

Syntax: int ADAM5KTCP_ReadReg(char szIP[], WORD wID, WORD wStartAddress, WORD wCount, WORD wData[]);

Parameter:

szIP[in]: the IP Address of the ADAM-5000/TCP that to be connected

wID[in]: the specific device ID for an Modbus/TCP device. The ADAM-5000/TCP is always assigned as 1

wStartAddress[in]: the starting address that to be read

wCount[in]: how many holdings register to be read

wData[out]: a unsigned 16 bits array that stored the read holding register

Return: Please refer to Chapter 6-2-4 “Return Codes” for more detail information

ADAM5KTCP_WriteReg

Description: Write the holding register value at a specified range described in parameters.

Syntax: int ADAM5KTCP_WriteReg(char szIP[], WORD wID, WORD wStartAddress, WORD wCount, WORD wData[]);

Parameter:

szIP[in]: the IP Address of the ADAM-5000/TCP that to be connected

wID[in]: the specific device ID for an Modbus/TCP device. The ADAM-5000/TCP is always assigned as 1

wStartAddress[in]: the starting address that to be written

wCount[in]: how many holdings register to be written

wData[out]: a unsigned 16 bits array that stored the value write to holding value

Return: Please refer to Chapter 6-2-4 “Return Codes” for more detail information

ADAM5KTCP_ReadCoil

Description: Read the coils value at a specified range described in parameters.

Syntax: int ADAM5KTCP_ReadCoil(char szIP[], WORD wID, WORD wStartAddress, WORD wCount, BYTE byData[]);

Parameter:

szIP[in]: the IP Address of the ADAM-5000/TCP that to be connected

wID[in]: the specific device ID for an Modbus/TCP device. The ADAM-5000/TCP is always assigned as 1

wStartAddress[in]: the starting address that to be read

wCount[in]: how many coils to be read

byData[out]: a 8 bit array that stored the read coil

Return: Please refer to Chapter 6-2-4 "Return Codes" for more detail information

ADAM5KTCP_WriteCoil

Description: Write the coils value at a specified range described in parameters.

Syntax: int ADAM5KTCP_WriteCoil(char szIP[], WORD wID, WORD wStartAddress, WORD wCount, BYTE byData[]);

Parameter:

szIP[in]: the IP Address of the ADAM-5000/TCP that to be connected

wID[in]: the specific device ID for an Modbus/TCP device. The ADAM-5000/TCP is always assigned as 1

wStartAddress[in]: the starting address that to be written

wCount[in]: how many coils to be written

byData[out]: an unsigned 8 bit array that stored values written to coil

Return: Please refer to Chapter 6-2-4 "Return Codes" for more detail information

ADAM5KTCP_SendReceive5KTCPCmd

Description: This function is designed for user's convenience, accepting the ASCII format string as a command. Then transform it to meet the Modbus/TCP specification.

Syntax: int ADAM5KTCP_SendReceive5KTCPCmd(char szIP[], char szSendToTCP[], char szReceiveFromTCP[], char szModbusSend[], char szModbusReceive[]);

Parameter:

szIP[in]: the IP Address of the ADAM-5000/TCP that to be connected

szSendToTCP[in]: the ASCII format string that send to a ADAM-5000/TCP

szReceiveFromTCP[out]: the ASCII format string that response from a ADAM-5000/TCP

szModbusSend[out]: the Modbus/TCP format string that send to a ADAM-5000/TCP

szModbusReceive[out]: the Modbus/TCP format string that response from a ADAM-5000/TCP

Return: Please refer to Chapter 6-2-4 "Return Codes" for more detail information

ADAM5KTCP_Add5KTCPForStream

Description: Assign a specified ADAM-5000/TCP to send stream data to the PC

Syntax: int ADAM5KTCP_Add5KTCPForStream(char szIP[]);

Parameters: szIP[in]: the IP Address of the ADAM-5000/TCP that assign to send stream data to the PC

Return: Please refer to Chapter 6-2-4 "Return Codes" for more detail information

ADAM5KTCP_ReadStreamData

Description: Receive stream data that comes from the specific ADAM-5000/TCP

Syntax: int ADAM5KTCP_ReadStreamData(char szIP[], struct _StreamData *pStreamData);

Parameters:

szIP[in]: to specify the IP Address for a user to receive the stream data

*pStreamData[out]: the stream data stored in _StreamData structure

Please refer to Chapter 6-2-5 "Data Structure" for more detail information about _StreamData structure.

Return: Please refer to Chapter6-2-4 "Return Codes" for more detail information

ADAM5KTCP_ReadAlarmInfo

Description: Receive alarm information that comes from the specific ADAM-5000/TCP

Syntax: int ADAM5KTCP_ReadAlarmInfo (struct _AlarmInfo *pAlarmInfo);

Parameters:

*pAlarmInfo[out]: the alarm information stored in _AlarmInfo structure

Please refer to Chapter 6-2-5 "Data Structure" for more detail information about _AlarmInfo structure.

Return: Please refer to Chapter 6-2-4 "Return Codes" for more detail information

ADAM5KTCP_StartStream

Description: Instruct the PC to start receiving stream data from the ADAM-5000/TCP

Syntax: int ADAM5KTCP_StartStream (HANDLE *EventFromApp);

Parameters:

*EventFromApp: the event object that would pass down to ADAM5KTCP.DLL

This event object would be signaled either a stream data send to PC or an alarm status change in ADAM-5000/TCP.Please refer to ADAM5KTCP_SetStream AlarmState for more detail information.

Return: Please refer to Chapter 6-2-4 "Return Codes" for more detail information

ADAM5KTCP_StopStream

Description: Instruct the PC to stop receiving stream data

Syntax: int ADAM5KTCP_StopStream( );

Parameters: void

Return: void

ADAM5KTCP_SetStreamAlarmState

Description: Set the criterion to signal the event object

Syntax: int ADAM5KTCP_SetStreamAlarmState(WORD wStreamAlarmState);

Parameters:

wStreamAlarmState[in]: When assigned to ADAM5KTCP_Receive

StreamIngoreAlarm: means the ADAM5KTCP.DLL always signals event object when any stream data comes from an ADAM-5000/TCP. Then the application can receive the stream data by calling "ADAM5KTCP_ReadStreamData()" function. When assigned to ADAM5KTCP_Receive

Stream WhenAlarm: means ADAM5KTCP.DLL only signals event object when a alarm status is triggered. Then the application can receive the alarm information about the ADAM-5000/TCP by calling "ADAM5KTCP_ReadAlarmInfo()" function.

Return: Please refer to Chapter 6-2-4 "Return Codes" for more detail information

ADAM5KTCP_Debug

Description: Trace the executive information about streaming data mechanism in ADAM5KTCP.DLL

(It is convenient to troubleshooting of user's applications.)

Syntax: int ADAM5KTCP_Debug(int *iMatchIndex, int *iReceiveCount, int *iThreadRun, int *iTotalStream, char szFromIP[]);

Parameters:

*iMatchIndex[out]: indicating which ADAM-5000/TCP cause signaling the event object

0 means the first ADAM-5000/TCP, 1 means second, 2 means third, and so on. The ordinal is implied when calling "ADAM5KTCP_Add5KTCPForStream()" function.

*iReceiveCount[out]: counts how many stream data have arrival

*iThreadRun[out]: indicating the working thread status in ADAM5KTCP.DLL

*iTotalStream[out]: reserved

szFromIP[out]: specify the IP Address of ADAM-5000/TCP which sends the stream data.

Return: Please refer to Chapter 6-2-4 "Return Codes" for more detail information

ADAM5KTCP_UDPOpen

Description: Opens a UDP socket and sets the timeout of send/receive interval to prepare send a command to ADAM-5000/TCP by UDP.

Syntax: int ADAM5KTCP_UDPOpen(int iSendTimeout, int iReceiveTimeout);

Parameters:

iSendTimeout[in]: the specified timeout interval for sending a command string to the ADAM-5000/TCP by UDP.

iReceiveTimeout[in]: the specified timeout interval for receiving a response string from the ADAM-5000/TCP by UDP.

Return: Please refer to Chapter 6-2-4 "Return Codes" for more detail information.

ADAM5KTCP_UDPClose

Description: Closes the UDP socket that has been opened by "ADAM5KTCP_UDPOpen()".

Syntax: int ADAM5KTCP_UDPClose();

Parameters: Void

Return: Please refer to Chapter 6-2-4 "Return Codes" for more detail information.

ADAM5KTCP_SendReceiveUDPCmd

Description: Sends a command to ADAM-5000/TCP and receives the response by UDP

Syntax: int ADAM5KTCP_SendReceiveUDPCmd(char szIP[], char szSend[], char szReceive[]);

Parameters:

szIP[in]: the IP Address of the ADAM-5000/TCP that send/receive the command/response

szSend[in]: the string in ASCII format that send to the ADAM-5000/TCP

szReceive[out]: the string in ASCII format that response from the ADAM-5000/TCP

6-2-4 Return Codes

Using these function libraries, you can read the error message and the against response from the returning codes.

ADAM5KTCP_NoError	(0)
ADAM5KTCP_StartupFailure	(-1)
ADAM5KTCP_SocketFailure	(-2)
ADAM5KTCP_UdpSocketFailure	(-3)
ADAM5KTCP_SetTimeoutFailure	(-4)
ADAM5KTCP_SendFailure	(-5)
ADAM5KTCP_ReceiveFailure	(-6)
ADAM5KTCP_ExceedMaxFailure	(-7)
ADAM5KTCP_CreateWsaEventFailure	(-8)
ADAM5KTCP_ReadStreamDataFailure	(-9)
ADAM5KTCP_InvalidIP	(-10)
ADAM5KTCP_ThisIPNotConnected	(-11)
ADAM5KTCP_AlarmInfoEmpty	(-12)

6-2-5 Data Structure

```
struct _StreamData
{
  WORD DIO[8];    // DI/DO data for Slot0, Slot1,...., Slot7
  WORD Slot0[8];  // AI/AO data for slot0
  WORD Slot1[8];  // AI/AO data for slot1
  WORD Slot2[8];  // AI/AO data for slot2
  WORD Slot3[8];  // AI/AO data for slot3
  WORD Slot4[8];  // AI/AO data for slot4
  WORD Slot5[8];  // AI/AO data for slot5
  WORD Slot6[8];  // AI/AO data for slot6
  WORD Slot7[8];  // AI/AO data for slot6
};  //StreamData,*pStreamData;

struct _AlarmInfo
{
   BYTE  bySlot;            // the Slot of 5000/TCP which cause the
                               alarm change
   BYTE  byChannel;         // the Channel of 5000/TCP which cause
                               the alarm change
   BYTE  byAlarmType;       // 0: Low Alarm, 1: High Alarm
   BYTE  byAlarmStatus;     // 0: Alarm Off, 1: Alarm On
   BYTE  byIndexOf5KTCP;    // indicate the index 5000/TCP which cause
                               the alarm change, zero-based
   char  szIP[20];          // the IP address which cause the alarm
                               change
   char  szDateTime[48];    // e.x 2001/09/23 10:12:34:567 (Year/Month/
                               Day Hour:Minute:Second:mSecond)
};
```

6-3 ADAM-5000/TCP Command

ADAM-5000/TCP system accepts a command/response form with the host computer. When systems are not transmitting they are in listen mode. The host issues a command to a system with a specified address and waits a certain amount of time for the system to respond. If no response arrives, a time-out aborts the sequence and returns control to the host. This chapter explains the structure of the commands with Modbus/TCP protocol, and guides to use these command sets to implement user's programs.

6-3-1 Command Structure

It is important to understand the encapsulation of a Modbus request or response carried on the Modbus/TCP network. A complete command is consisted of command head and command body. The command head is prefixed by six bytes and responded to pack Modbus format; the command body defines target device and requested action. Following example will help you to realize this structure quickly.

Example:

If you want to read the value of ADAM-5017 in ADAM-5000/TCP's slot 0(2 channels; address: 40001~40002), the request command should be:

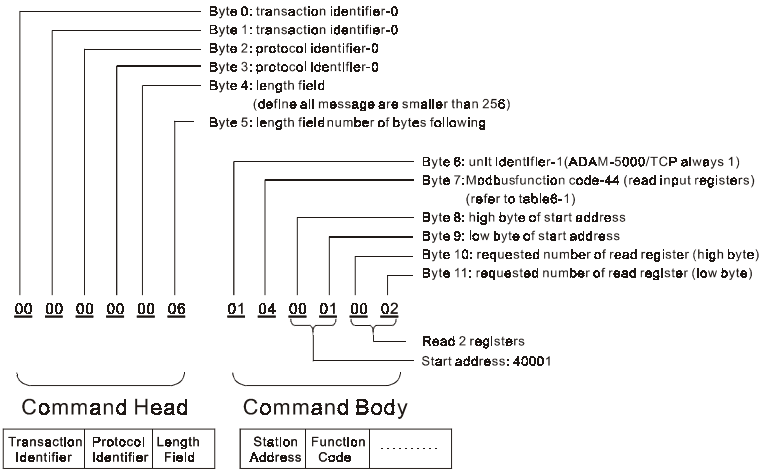

Figure 6-1: Request Comment Structure

And the response should be:

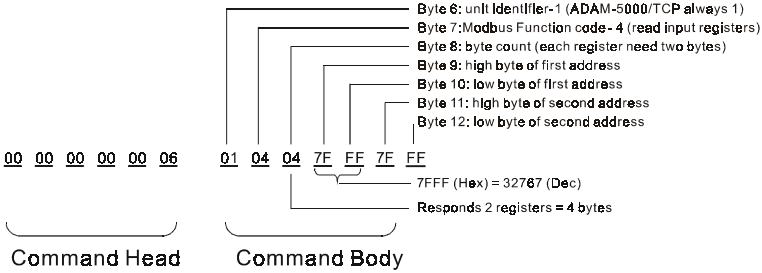

Figure 6-2: Response Comment Structure

6-3-2 Modbus Function Code Introduction

To full-fill the programming requirement, there is a series of function code standard for user's reference...

Code (Hex)	Name	Usage
01	Read Coil Status	Read Discrete Output Bit
02	Read Input Status	Read Discrete Input Bit
03	Read Holding Registers	Read 16-bit register. Used to read integer or floating point process data.
04	Read Input Registers	
05	Force Single Coil	Write data to force coil ON/OFF
06	Preset Single Register	Write data in 16-bit integer format
08	Loopback Diagnosis	Diagnostic testing of the communication port
15	Force Multiple Coils	Write multiple data to force coil ON/OFF
16	Preset Multiple Registers	Write multiple data in 16-bit integer format

Table 6-1: Response Comment Structure

Function Code 01

The function code 01 is used to read the discrete output's ON/OFF status of ADAM-5000/TCP in a binary data format.

Request message format for function code 01:

Command Body					
Station Address	Function Code	Start Address High Byte	Start Address Low Byte	Requested Numberof Coil High Byte	Requested Numberof Coil Low Byte

Example: Read coil number 1 to 8 (address number 10001 to 10008) from ADAM-5000/TCP

01 01 00 01 00 08

Response message format for function code 01:

Command Body					
Station Address	Function Code	Byte Count	Data	Data	…

Example: Coils number 2 and 7 are on, all others are off.

01 01 01 42

In the response the status of coils 1 to 8 is shown as the byte value 42 hex, equal to 0100 0010 binary.

Function Code 02

The function code 02 is used to read the discrete input's ON/OFF status of ADAM-5000/TCP in a binary data format.

Request message format for function code 02:

Command Body					
Station Address	Function Code	Start Address High Byte	Start Address Low Byte	Requested Numberof Input High Byte	Requested Numberof Input Low Byte

Example: Read coil number 1 to 8 (address number 10001 to 10008) from ADAM-5000/TCP

01 01 00 01 00 08

Response message format for function code 02:

Command Body					
Station Address	Function Code	Byte Count	Data	Data	…

Example: input number 2 and 3 are on, all others are off.

01 01 01 60

In the response the status of input 1 to 8 is shown as the byte value 60 hex, equal to 0110 0000 binary.

Function Code 03/04

The function code 03 or 04 is used to read the binary contents of input registers

Request message format for function code 03 or 04:

Command Body					
Station Address	Function Code	Start Address High Byte	Start Address Low Byte	Requested Numberof Register High Byte	Requested Numberof Register Low Byte

Example: Read Analog inputs #1 and #2 in addresses 40001 to 40004 as floating point value from ADAM-5000/TCP

01 04 00 01 00 04

Response message format for function code 03 or 04:

Command Body					
Station Address	Function Code	Byte Count	Data	Data	…

Example: Analog input #1 and #2 as floating point values where AI#1=100.0 and AI#2=55.32

01 04 08 42 C8 00 00 47 AE 42 5D

Function Code 05

Force a single coil to either ON or OFF. The requested ON/OFF state is specified by a constant in the query data field. A value of FF 00 hex requests it to be ON. A value of 00 00 hex requests it to be OFF. And a value of FF FF hex requests it to release the force.

Request message format for function code 05:

Command Body					
Station Address	Function Code	Coil Address High Byte	Coil Address Low Byte	Force DataHigh Byte	Force Data Low Byte

Example: Force coil 3 (address 00003) ON in ADAM-5000/TCP

01 05 00 03 FF 00

Response message format for function code 05:

The normal response is an echo of the query, returned after the coil state has been forced.

Command Body					
Station Address	Function Code	Coil Address High Byte	Coil Address Low Byte	Force DataHigh Byte	Force Data Low Byte

Function Code 06

Presets integer value into a single register.

Request message format for function code 06:

Command Body					
Station Address	Function Code	Register Address High Byte	Register Address Low Byte	Preset DataHigh Byte	Preset DataLow Byte

Example: Preset register 40002 to 00 04 hex in ADAM-5000/TCP

01 06 00 02 00 04

Response message format for function code 06:

The normal response is an echo of the query, returned after the coil state has been preset.

Command Body					
Station Address	Function Code	Register Address High Byte	Register Address Low Byte	Preset DataHigh Byte	Preset DataLow Byte

Function Code 08

Echoes received query message. Message can be any length up to half the length of the data buffer minus 8 bytes.

Request message format for function code 08:

Command Body		
StationAddress	FunctionCode	Any data, length limited to approximately half the length of the data buffer

Response message format for function code 08:

Command Body		
StationAddress	FunctionCode	Data bytes received

Example: 01 08 00 02 00 04

Function Code 15 (0F hex)

Forces each coil in a sequence of coils to either ON or OFF.

Request message format for function code 15:

Command Body								
Station Address	Function Code	Start Address High Byte	Start Address Low Byte	Requested Numberof Coil High Byte	Requested Numberof Coil Low Byte	Byte Count	Force DataHigh Byte	Force DataLow Byte

Example: Request to force a series of 10 coils starting at address 00020 (14 hex) in ADAM-5000/TCP.

01 0F 00 14 00 0A 02 CD 01

The query data contents are two bytes: CD 01 hex, equal to 1100 1101 0000 0001 binary. The binary bits are mapped to the addresses in the following way.

Bit: 1 1 0 0 1 1 0 1 0 0 0 0 0 0 0 0 1

Address (000XX): 27 26 25 24 23 22 21 20 ----------29 28

Response message format for function code 15:

The normal responses return the station address, function code, start address, and requested number of coil forced.

Command Body					
Station Address	Function Code	Start Address High Byte	Start Address Low Byte	Requested Numberof Coil High Byte	Requested Numberof Coil Low Byte

Example: 01 0F 00 14 00 0A

Function Code 16 (10 hex)

Preset values into a sequence of holding registers.

Request message format for function code 16:

Command Body							
Station Address	Function Code	Start Address High Byte	Start Address Low Byte	Requested Number of Register High Byte	Requested Number of Register Low Byte	Byte Count	Data

Example: Preset constant #1 (address 40009) to 100.0 in ADAM-5000/TCP.

01 10 00 09 00 02 04 42 C8 00 00

Response message format for function code 16:

The normal responses return the station address, function code, start address, and requested number of registers preset.

Command Body					
Station Address	Function Code	Start Address High Byte	Start Address Low Byte	Requested Numberof Register High Byte	Requested Numberof Register Low Byte

Example: 01 10 00 09 00 02

6-4 Apply with ASCII Command for ADAM-5000/TCP System

For users do not familiar to Modbus protocol, Advantech offers a function library as a protocol translator, integrating ASCII command into Modbus/TCP structure. Therefore, users familiar to ASCII command can access ADAM-5000/TCP easily. Before explaining the structure of ASCII command packed with Modbus/TCP format. Let's see how to use an ASCII command and how many commands are available for your program.

TCP Format	Modbus Format	ASCII Command

Figure 6-3: ASCII Command Structure in ADAM-5000/TCP

6-4-1 Sytax of ASCII

Command Syntax:

[delimiter character][address][slot] [channel][command][data][checksum] [carriage return]

Every command begins with a delimiter character. There are four valid characters:

$ and @

The delimiter character is followed by a two-character address (hex-decimal) that specifies the target system. The two characters following the address specified the module slot and channel.

Depending on the command, an optional data segment may follow the command string. An optional two- character checksum may also be appended to the command string. Every command is terminated with a carriage return (cr).

Note: All commands should be issued in UPPERCASE characters only!

The command set is divided into the following four categories:

- System Command Set
- Analog Input Command Set
- Analog Output Modules Command Set
- Digital I/O Modules Command Set

Every command set category starts with a command summary of the particular type of module, followed by datasheets that give detailed information about individual commands.

Although commands in different subsections sometime share the same format, the effect they have on a certain module can be completely different than that of another. Therefore, the full command sets for each type of modules are listed along with a description of the effect the command has on the given module.

6-4-2 System Command Set

Command Syntax	Command Name	Description
%aannccff	Configuration	Set the baudrate and checksum status for a specified ADAM-5000 system
$aa2	Configuration Status	Returns the configuration status for a specified ADAM-5000 system
$aaM	Read Module Name	Returns the module name from a specified ADAM-5000/TCP system
$aaF	Read Firmware Version	Returns the firmware version code from a specified ADAM-5000/TCP system
$aaT	Read I/O Type	Returns the I/O model number of all slots for a specified ADAM-5000/TCP system

Table 6-2: CPU Command Set Table

%aannccff

Name Configuration

Description Sets RS-485 network baud rate and checksum status for a specified ADAM-5000/TCP system

Syntax **%aannccff(cr)**

% is a delimiter character.

aa (range 00-FF) represents the 2-character hexadecimal Modbus network address of the ADAM-5000/TCP system you want to configure.

nn is reserved for system use. Its default value is 00h.

cc represents the baud rate code.

ff is a hexadecimal number that equals the 8-bit parameter representing checksum status. The sixth bit represents the checksum status; 1 means enabled while 0 means disabled. The other bits are not used and are set to 0.

(cr) is the terminating character, carriage return (0Dh).

Response **!aa (cr)** if the command is valid.

?aa (cr) if an invalid parameter was entered or if the INIT* terminal was not grounded when attempting to change baud rate or checksum settings. There is no response if the module detects a syntax error, communication error or if the specified address does not exist.

! delimiter character indicating a valid command was received.

? delimiter character indicating the command was invalid.

aa (range 00-FF) represents the 2-character hexadeci-

mal Modbus network address of an ADAM-5000/TCP system.

(cr) is the terminating character, carriage return (0Dh).

Example

command: **%01000A40(cr)**

response: **!01(cr)**

The ADAM-5000/TCP system with address 01h is configured to a baud rate of 115.2 Kbps and with checksum generation or validation.

The response indicates that the command was received. Wait 7 seconds to let the new configuration setting take effect before issuing a new command to the system.

Note: All configuration parameters can be changed dynamically, except checksum and baud rate parameters. They can only be altered when the INIT* terminal is grounded.

Baud Rate Code	Baud Rate
03h	1200 bps
04h	2400 bps
05h	4800 bps
06h	9600 bps
07h	19.2 Kbps
08h	38.4 Kbps
09h	57.6 Kbps
0Ah	115.2 Kbps

Table 6-3 Baud rate codes

$aa2

Name Configuration Status

Description Returns the configuration status for a specified system module.

Syntax **$aa2(cr)**

$ is a delimiter character.

aa (range 00-FF) represents the 2-character hexadecimal Modbus network address of the ADAM-5000/TCP system you want to interrogate.

2 is the Configuration Status command.

(cr) is the terminating character, carriage return (0Dh).

Response **!aaccff(cr)** if the command is valid.

?aa(cr) if an invalid operation was entered.

There is no response if the module detects a syntax error, communication error or if the specified address does not exist.

! delimiter character indicating a valid command was received.

? delimiter character indicating the command was in-valid.

aa (range 00-FF) represents the 2-character hexadecimal address of an ADAM-5000/TCP system.

cc represents the baud rate code.

ff is a hexadecimal number that equals the 8-bit parameter representing checksum status. The sixth bit represents the checksum status; 1 means enabled while 0 means disabled. The other bits are not used and are set to 0.

(cr) is the terminating character, carriage return (0Dh).

(See also the **%aannccff** configuration command)

Example

command: **$012(cr)**

response: **!010600(cr)**

The command requests the ADAM-5000/TCP system at address 01h to send its configuration status.

The ADAM-5000 system at address 01h responds with a baud rate of 9600 bps and with no checksum function or checksum generation.

$aaM

Name Read Module Name

Description Returns the module name from a specified ADAM-5000/TCP system.

Syntax **$aaM(cr)**

$ is a delimiter character.

aa (range 00-FF) represents the 2-character hexadecimal address of the ADAM-5000/TCP system you want to interrogate.

M is the Module Name command.

(cr) is the terminating character, carriage return (0Dh).

Response **!aa5000(cr)** if the command is valid.

?aa(cr) if an invalid operation was entered.

There is no response if the module detects a syntax error, communication error or if the specified address does not exist.

! delimiter character indicating a valid command was received.

? delimiter character indicating the command was invalid.

aa (range 00-FF) represents the 2-character hexadecimal address of an ADAM-5000/TCP system.

(cr) is the terminating character, carriage return (0Dh).

Example command: **$01M(cr)**

response: **!015000(cr)**

The command requests the system at address 01h to send its module name.

The system at address 01h responds with module name **5000/TCP** indicating that there is an ADAM-5000/TCP at address 01h.

$aaF

Name	Read Firmware Version
Description	Returns the firmware version code from a specified ADAM-5000/TCP system.
Syntax	**$aaF(cr)** **$** is a delimiter character. **aa** (range 00-FF) represents the 2-character hexadecimal address of the ADAM-5000/TCP system you want to interrogate. **F** is the Firmware Version command. **(cr)** is the terminating character, carriage return (0Dh).
Response	**!aa(version)(cr)** if the command is valid. **?aa(cr)** if an invalid operation was entered. There is no response if the module detects a syntax error, communication error or if the specified address does not exist. **!** delimiter character indicating a valid command was received. **?** delimiter character indicating the command was invalid. **aa** (range 00-FF) represents the 2-character hexadecimal address of an ADAM-5000/TCP system. **(version)** represents the firmware version of the ADAM-5000/TCP system. **(cr)** is the terminating character, carriage return (0Dh).
Example	command: **$01F(cr)** response: **!01A1.01(cr)** The command requests the system at address 01h to send its firmware version. The system responds with firmware version **A1.01**.

$aaT

Name	Read I/O Type
Description	Returns the I/O module no. of all slots for a specified ADAM-5000/TCP system.
Syntax	**$aaT(cr)** **$** is a delimiter character. **aa** (range 00-FF) represents the 2-character hexadecimal address of the ADAM-5000/TCP system you want to interrogate. **T** is the I/O Module Types command. **(cr)** is the terminating character, carriage return (0Dh).
Response	**!aabbccddee(cr)** if the command is valid. **?aa(cr)** if an invalid operation was entered. There is no response if the module detects a syntax error, communication error or if the specified address does not exist. **!** delimiter character indicating a valid command was received. **?** delimiter character indicating the command was invalid. **aa** (range 00-FF) represents the 2-character hexadecimal address of an ADAM-5000/TCP system. **bb, cc, dd, ee** represent the I/O Module No. of all slots from slot 0 thru 3 of the ADAM-5000/TCP system. **(cr)** is the terminating character, carriage return (0Dh).
Example	command: **$01T(cr)** response: **!0118245160(cr)** The command requests the ADAM-5000/TCP system at address 01h to send all existing I/O module numbers. The system at address 01h responds with I/O module numbers 18, 24, 51 and 60 in slots 0-3. This means that the ADAM-5000/TCP system contains an ADAM-5018, ADAM-5024, ADAM-5051 and ADAM-5060 in slots 0 thru 3.

6-4-3 Analog Input Command Set

Before setting commands, the user needs to know the type of main unit being used. If ADAM-5000/485 is being used, the "i" in Si can be set at 0 to 3. If ADAM-5000E or ADAM-5000/TCP is being used, the "i" in Si can be set at 0 to 7.

ADAM-5013 RTD Input Command Set

Command Syntax	Command Name	Description
$aaSiArrff	RTD Configuration	Sets slot index, input range, data format and integration time for a specified RTD input module in a specified system
$aaSiB	RTD Configuration Status	Returns the configuration parameters for a specified RTD input module in a specified system
$aaSi	All RTD Data In	Returns the input values of all channels of a specified RTD input module of a specified system in engineering units
$aaSiCj	Specified RTD Data In	Returns the input value of a specified channel for a specified RTD input module of a specified system in engineering units

Command Syntax	Command Name	Description
$aaSiER	Initialize EEPROM Data	Initializes all EEPROM data in a specified RTD input module to their default values
$aaSi5mm	Enable/Disable Channels for Multiplexing	Enables/disables multiplexing simultaneously for separate channels of the specified input module
$aaSi6	Read Channels Status	Asks a specified input module to return the status of all channels
$aaSi0	RTD Span Calibration	Calibrates a specified RTD input module to correct for gain errors
$aaSi1	RTD Zero Calibration	Calibrates a specified RTD input module to correct for offset errors
$aaSi2	RTD Self Calibration	Causes a specified RTD input module of a specified system to do a self calibration.

Table 6-4: ADAM-5013 RTD Input command Set Table

$aaSiArrff

Name RTD Configuration

Description Sets slot index, input range, data format and integration time for a specified RTD input module in a specified system.

Syntax **$aaSiArrff(cr)**

$ is a delimiter character.

aa (range 00-FF) represents the 2-character hexadecimal address of the ADAM-5000/TCP system you want to configure.

Si identifies the desired slot i (i:0 to 7).

A represents the I/O module configuration command.

rr represents the 2-character hexadecimal code of the input range. (See Appendix B)

ff is a hexadecimal number that equals the 8-bit parameter representing data format. Bits 0 and 1 represent data format. Bit 7 represents integration time. The layout for the 8-bit parameter is shown in Figure 6-4. The other bits are not used and are set to 0. (cr) is the terminating character, carriage return (0Dh).

Response **!aa(cr)** if the command is valid.

?aa(cr) if an invalid operation was entered.

There is no response if the module detects a syntax error or communication error or if the specified address does not exist.

! delimiter character indicating a valid command was received.

? delimiter character indicating the command was invalid.

aa (range 00-FF) represents the 2-character hexadecimal address of an ADAM-5000/TCP system.

(cr) is the terminating character, carriage return (0Dh).

Example command: **$01S3A2000(cr)**

response: **!35(cr)**

The RTD input module in slot 3 of the ADAM-5000/TCP system at address 01h is configured to an RTD type Pt -100 to 100° C, engineering unit data format, and integration time 50ms (60Hz). The response indicates that the command has been received.

$aaSiB

Name RTD Configuration Status

Description Returns the configuration parameters for a specified RTD input module in a specified system.

Syntax **$aaSiB(cr)**

$ is a delimiter character.

aa (range 00-FF) represents the 2-character hexadecimal address of the ADAM-5000/TCP system you want to interrogate.

Si identifies the desired slot i (i:0 to 7)

B represents the configuration status command

(cr) is the terminating character, carriage return (0Dh).

Response **!aarrff(cr)** if the command is valid.

?aa(cr) if an invalid operation was entered.

There is no response if the module detects a syntax error or communication error or if the specified address does not exist.

! delimiter character indicating a valid command was received.

? delimiter character indicating the command was invalid.

aa (range 00-FF) represents the 2-character hexadecimal address of an ADAM-5000/TCP system.

rr represents the 2-character hexadecimal code of the input range. (See Appendix B)

ff is a hexadecimal number that equals the 8-bit parameter representing data format. Bits 0 and 1 represent data format. Bit 7 represents integration time (See RTD Configuration Command $aaSiArrff).

(cr) is the terminating character, carriage return (0Dh).

Example command: **$01S3B(cr)**

response: **!012000(cr)**

The RTD input module in slot 3 of the ADAM-5000/TCP system at address 01h responds with an RTD type Pt -100 to 100° C, engineering unit data format, and integration time 50ms (60Hz).

$aaSi

Name All RTD Data In

Description Returns the input values of all channels of a specified RTD input module in a specified system in engineering units only.

Syntax **$aaSi(cr)**

$ is a delimiter character.

aa (range 00-FF) represents the 2-character hexadecimal Modbus network address of the ADAM-5000/TCP system you want to interrogate.

Si is the I/O slot of the ADAM-5000/TCP system you want to read.

(cr) is the terminating character, carriage return (0Dh).

Response **>(data)(data)(data)(cr)** if the command is valid.

?aa(cr) if an invalid operation was entered.

There is no response if the module detects a syntax error or communication error or if the specified address does not exist.

> delimiter character indicating a valid command was received.

? delimiter character indicating the command was invalid.

aa (range 00-FF) represents the 2-character hexadecimal Modbus network address of the ADAM-5000/TCP system.

(data) is the input value in engineering units of the interrogated module of the specified system. The (data) from all channels is shown in sequence from 0 to 2. If

(data)=" ", it means the channel is invalid.

(cr) is the terminating character, carriage return (0Dh).

Example

command: **$01S3(cr)**

response: **>+80.01 +20.00 -40.12(cr)**

The command requests the RTD input module in slot 3 of the ADAM-5000/TCP system at address 01h to return the input values of all channels. The RTD input module responds with input values of all channels in sequence from 0 to 2: +80.01° C, +20.00° C, -40.12° C.

$aaSiCj

Name Specified RTD Data In

Description Returns the input value of a specified channel for a specified RTD input module of a specified system in engineering units only.

Syntax **$aaSiCj(cr)**

$ is a delimiter character.

aa (range 00-FF) represents the 2-character hexadecimal Modbus network address of the ADAM-5000/TCP system you want to interrogate.

SiCj identifies the desired slot i (i:0 to 7) and the desired channel j (j:0 to 2) of the module you want to interrogate.

(cr) is the terminating character, carriage return (0Dh).

Response **>(data)(cr)** if the command is valid.

?aa(cr) if an invalid operation was entered.

There is no response if the module detects a syntax error or communication error or if the specified address does not exist.

> delimiter character indicating a valid command was received.

? delimiter character indicating the command was invalid.

aa (range 00-FF) represents the 2-character hexadecimal Modbus network address of an ADAM-5000/TCP system.

(data) is the input value in engineering units of the specified channel for the specified RTD input module of the specified system. If (data)=" ", it means the channel is invalid.

(cr) is the terminating character, carriage return (0Dh).

Example

command: **$01S3C0(cr)**

response: **>+80.01(cr)**

The command requests the RTD input module in slot 3 of the ADAM-5000/TCP system at address 01h to return the input value of channel 0. The RTD input module responds that the input value of channel 0 is +80.01° C.

$aaSiER

Name Initialize EEPROM Data

Description Initializes all EEPROM data in a specified analog input module to their default values. This command is sent following a failed attempt to calibrate a module (the module shows no effect from an attempted calibration).

Following initialization, the problem module should readily accept calibration.

Syntax **$aaSiER(cr)**

$ is a delimiter character.

aa (range 00-FF) represents the 2-character hexadecimal Modbus network address of the ADAM-5000/TCP system.

Si identifies the I/O slot in which you wish to initialize all EEPROM data.

ER represents the initialize EEPROM data command.

(cr) is the terminating character, carriage return (0Dh)

Response **!aa(cr)** if the command is valid.

?aa(cr) if an invalid operation was entered.

There is no response if the module detects a syntax error or communication error or if the specified address does not exist.

! delimiter character indicating a valid command was received.

? delimiter character indicating the command was invalid.

aa (range 00-FF) represents the 2-character hexadecimal Modbus network address of an ADAM-5000/TCP system.

(cr) is the terminating character, carriage return (0Dh)

$aaSi5mm

Name Enable/Disable Channels for multiplexing

Description Enables/Disables multiplexing for separate channels of the specified input module

Syntax **$aaSi5mm(cr)**

$ is a delimiter character.

aa (range 00-FF) represents the 2-character hexadecimal address of the ADAM-5000/TCP system.

Si identifies the I/O slot of the system.

5 represents the enable/disable channels command.

mm are two hexadecimal values. Each value is interpreted by the module as 4 bits. The first 4-bit value is 0. The second 4-bit value represents the status of channels 0 to 3. A value of 0 means the channel is disabled, while a value of 1 means the channel is enabled. (See the Read Channel Status Command $aaSi6).

Note: Bit 4 can not enable a channel in the ADAM-5013 since the module is physically limited to 3 channels.

(cr) is the terminating character, carriage return (0Dh)

Response **!aa(cr)** if the command is valid.

?aa(cr) if an invalid operation was entered.

There is no response if the module detects a syntax error or communication error or if the specified address does not exist.

! delimiter character indicating a valid command was received.

? delimiter character indicating the command was invalid.

aa (range 00-FF) represents the 2-character hexadecimal address of an ADAM-5000/TCP system.

(cr) is the terminating character, carriage return (0Dh)

Example command: **$01S1501(cr)**

response: **!01(cr)**

The command enables/disables the channels of the analog input module in slot 1 of the system at address 01h. Hexadecimal 0 is a fixed value. Hexadecimal 1 equals binary 0001, which enables channel 0 and disables channels 1 and 2.

$aaSi6

Name	Read Channels Status
Description	Asks a specified input module to return the status of all channels
Syntax	**$aaSi6(cr)** **$** is a delimiter character. **aa** (range 00-FF) represents the 2-character hexadecimal address of the ADAM-5000/TCP system you want to interrogate. **Si** identifies the I/O slot of the system you want to read channels status. The channel status defines whether a channel is enabled or disabled. **6** represents the read channels status command. **(cr)** is the terminating character, carriage return (0Dh)
Response	**!aamm(cr)** if the command is valid. **?aa(cr)** if an invalid operation was entered. There is no response if the module detects a syntax error or communication error or if the specified address does not exist. **!** delimiter character indicating a valid command was received. **?** delimiter character indicating the command was invalid. **aa** (range 00-FF) represents the 2-character hexadecimal address of an ADAM-5000/TCP system. **mm** are two hexadecimal values. Each value is interpreted as 4 bits. The first 4-bit value is 0. The second 4-bit value represents the status of channels 0-3. A value of 0 means the channel is disabled, while a value of 1 means the channel is enabled. **(cr)** is the terminating character, carriage return (0Dh)
Example	command: **$01S16(cr)** response: **!0101(cr)** The command asks the analog input module in slot 1 of the system at address 01h to send the status of its input channels. The analog input module responds that channel 0 of its multiplex channels is enabling, the others are disabled (01h equals 0000 and 0001).

$aaSi0

Name RTD Span Calibration

Description Calibrates a specified RTD input module of a specified system to correct for gain errors.

Syntax **$aaSi0(cr)**

$ is a delimiter character.

aa (range 00-FF) represents the 2-character hexadecimal

address of the ADAM-5000/TCP system which contains the RTD module.

Si identifies the slot i (i:0 to 7) containing the RTD module to be calibrated.

0 represents the span calibration command.

(cr) is the terminating character, carriage return (0Dh).

Response. **!aa(cr)** if the command is valid.

?aa(cr) if an invalid operation was entered.

There is no response if the module detects a syntax error or communication error or if the specified address does not exist.

> delimiter character indicating a valid command was received.

? delimiter character indicating the command was invalid.

aa (range 00-FF) represents the 2-character hexadecimal address of an ADAM-5000/TCP system.

(cr) is the terminating character, carriage return (0Dh).

$aaSi1

Name RTD Zero Calibration

Description Calibrates a specified RTD input module of a specified system to correct for offset errors.

Syntax **$aaSi1(cr)**

$ is a delimiter character.

aa (range 00-FF) represents the 2-character hexadecimal address of the ADAM-5000/TCP system which contains the module which is to be calibrated.

Si identifies the slot i (i:0 to 7) containing the RTD module to be calibrated.

1 represents the zero calibration command.

(cr) is the terminating character, carriage return (0Dh).

Response **!aa(cr)** if the command is valid.

?aa(cr) if an invalid operation was entered.

There is no response if the module detects a syntax error or communication error or if the specified address does not exist.

! delimiter character indicating a valid command was received.

? delimiter character indicating the command was invalid.

aa (range 00-FF) represents the 2-character hexadecimal address of an ADAM-5000/TCP system.

(cr) is the terminating character, carriage return (0Dh).

$aaSi2

Name RTD Self Calibration

Description Causes a specified RTD input module of a specified system to do a self- calibration.

Note: This command is for use when RTD Zero and Span calibration commands have been tried and had no effect. A user first issues an RTD self-calibration command, and then issues zero and span calibration commands.

Syntax **$aaSi2(cr)**

$ is a delimiter character.

aa (range 00-FF) represents the 2-character hexadecimal Modbus network address of the ADAM-5000/TCP system which contains the module to be calibrated.

Si identifies the desired slot i (i:0 to 7) containing the module to be calibrated.

2 represents the self calibration command.

(cr) is the terminating character, carriage return (0Dh).

Response **!aa (cr)** if the command is valid.

?aa (cr) if an invalid operation was entered.

There is no response if the module detects a syntax error or communication error or if the specified address does not exist.

! delimiter character indicating a valid command was received.

? delimiter character indicating the command was invalid.

aa (range 00-FF) represents the 2-character hexadecimal Modbus network address of an ADAM-5000/TCP system.

(cr) is the terminating character, carriage return (0Dh).

ADAM-5017/5018 Analog Input Command Set

Command Syntax	Command Name	Description
$aaSiArrff	Configuration	Sets slot index, input range, data format and integration time for a specified analog input module in a specified system.
$aaSiB	Configuration Status	Returns the configuration parameters for a specified analog input module of a specified system.
$aaSi5mm	Enable/Disable Channels for multiplexing	Enables/Disables multiplexing for separate channels of the specified input module
$aaSi6	Read Channels Status	Asks a specified input module to return the status of all channels
#aaSi	All Analog Data In	Returns the input value of all channels for a specified analog input module of a specified system in engineering units only.
#aaSiCj	Specified Analog Data In	Returns the input value of a specified channel for a specified analog input module of a specified system in engineering units only
$aaSiER	Initialize EEPROM Data	Initializes all EEPROM data in a specified analog input module to their default values.
$aaSiØ	Span Calibration	Calibrates a specified analog input module to correct for gain errors
$aaSi1	Zero Calibration	Calibrates a specified analog input module to correct for offset errors
$aaSi3	CJC Status	Returns the value of the CJC (Cold Junction Compensation) sensor for a specified analog input module
$aaSi9shhhh	CJC Zero Calibration	Calibrates a CJC sensor for offset errors

Table 6-5: ADAM-5017/5018 Analog Input command Set Table

$aaSiArrff

Name Configuration

Description Sets slot index, input range, data format and integration time for a specified analog input module in a specified system.

Syntax **$aaSiArrff(cr)**

$ is a delimiter character.

aa (range 00-FF) represents the 2-character hexadecimal address of the ADAM-5000/TCP system you want to configure.

Si identifies the I/O slot you want to configure.

A is I/O module configuration command.

rr represents the 2-character hexadecimal code of the input range. (See Appendix B)

ff is a hexadecimal number that equals the 8-bit parameter representing data format. Bits 0 and 1 represent data format. Bit 7 represents integration time. The layout of the 8-bit parameter is shown in Figure 6-3. The other bits are not used and are set to 0.

(cr) is the terminating character, carriage return (0Dh)

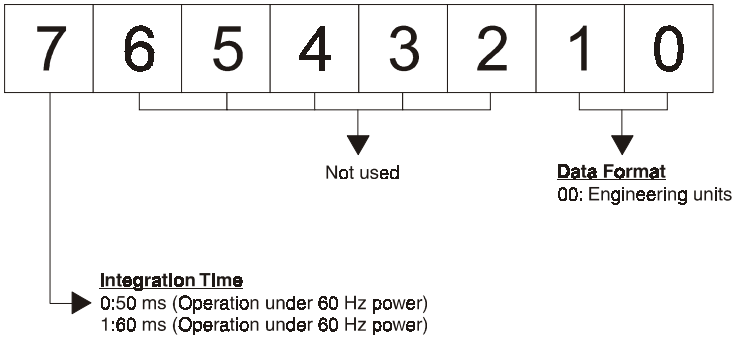

Figure 6-4: Data format for 8-bit parameters

Response **!aa(cr)** if the command is valid.

?aa(cr) if an invalid operation was entered.

There is no response if the module detects a syntax error or communication error or if the specified address does not exist.

! delimiter character indicating a valid command was received.

? delimiter character indicating the command was invalid.

aa (range 00-FF) represents the 2-character hexadecimal address of an ADAM-5000/TCP system.

(cr) is the terminating character, carriage return (0Dh)

Example command: **$01S3A0000(cr)**

response: **!01(cr)**

The analog input module in slot 3 of the ADAM-5000/TCP system at address 01h is configured to an input range ±15mV, engineering units data format, and integration time 50ms (60Hz). The response indicates that the command has been received.

Note: An analog input module requires a maximum of 7 seconds to perform auto calibration and ranging after it is reconfigured. During this time span, the module cannot be addressed to perform any other actions.

$aaSiB

Name Configuration Status

Description Returns the configuration status parameters for a specified analog input module of a specified system.

Syntax **$aaSiB(cr)**

$ is a delimiter character.

aa (range 00-FF) represents the 2-character hexadecimal address of the ADAM-5000/TCP system you want to interrogate.

Si identifies the I/O slot you want to read.

B is configuration status command.

(cr) is the terminating character, carriage return (0Dh)

Response **!aarrff(cr)** if the command is valid.

?aa(cr) if an invalid operation was entered.

There is no response if the module detects a syntax error or communication error or if the specified address does not exist.

! delimiter character indicating a valid command was received.

? delimiter character indicating the command was invalid.

aa (range 00-FF) represents the 2-character hexadecimal address of an ADAM-5000/TCP system.

rr represents the 2-character hexadecimal code of the input range.

ff is a hexadecimal number that equals the 8-bit parameter representing data format. Bit 0 and 1 represent data format. Bit 7 represents integration time. (See Configuration Command $aaSiArrff).

(cr) is the terminating character, carriage return (0Dh)

Example command: **$01S1B**

response: **!010000**

The ADAM-5018 analog input module in slot 1 of the ADAM-5000/TCP system at address 01h responds with an input range ±15mV, engineering units data format, and integration time 50ms (60Hz).

$aaSi5mm

Name Enable/Disable Channels for multiplexing

Description Enables/Disables multiplexing for separate channels of the specified input module

Syntax **$aaSi5mm(cr)**

$ is a delimiter character.

aa (range 00-FF) represents the 2-character hexadecimal address of the ADAM-5000/TCP system.

Si identifies the I/O slot of the system.

5 identifies the enable/disable channels command.

mm are two hexadecimal values. Each value is interpreted as 4 bits. The first 4-bit value represents the status of channels 4-7, the second 4 bit value represents the status of channels 0-3. A value of 0 means the channel is disabled, while a value of 1 means the channel is enabled. (See the Read Channel Status Command $aaSi6)

(cr) is the terminating character, carriage return (0Dh)

Note: Bit 7 cannot be enabled in the ADAM-5018 since the module is physically limited to 7 channels.

Response **!aa(cr)** if the command is valid.

?aa(cr) if an invalid operation was entered.

There is no response if the module detects a syntax error or communication error or if the specified address does not exist.

! delimiter character indicating a valid command was received.

? delimiter character indicating the command was invalid.

aa (range 00-FF) represents the 2-character hexadecimal address of an ADAM-5000/TCP system.

(cr) is the terminating character, carriage return (0Dh)

Example command: **$01S1581(cr)**

response: **!01(cr)**

The command enables/disables channels of the analog input module in slot 1 of the system at address 01h. Hexadecimal 8 equals binary 1000, which enables channel 7 and disables channels 4, 5 and 6. Hexadecimal 1 equals binary 0001, which enables channel 0 and disables channels 1, 2 and 3.

$aaSi6

Name Read Channels Status

Description Asks a specified input module to return the status of all channels

Syntax **$aaSi6(cr)**

$ is a delimiter character.

aa (range 00-FF) represents the 2-character hexadecimal address of the ADAM-5000/TCP system you want to interrogate.

Si identifies the I/O slot of the system you want to read channels status. The channel status defines whether a channel is enabled or disabled.

6 is the read channels status command.

(cr) is the terminating character, carriage return (0Dh)

Response **!aamm(cr)** if the command is valid.

?aa(cr) if an invalid operation was entered.

There is no response if the module detects a syntax error or communication error or if the specified address does not exist.

! delimiter character indicating a valid command was received.

? delimiter character indicating the command was invalid.

aa (range 00-FF) represents the 2-character hexadecimal address of an ADAM-5000/TCP system.

mm are two hexadecimal values. Each value is interpreted as 4 bits. The first 4-bit value represents the status of channels 4-7, the second 4 bits represents the status of channels 0-3. A value of 0 means the channel is disabled, while a value of 1 means the channel is enabled.

(cr) is the terminating character, carriage return (0Dh)

Example command: **$01S16(cr)**

response: **!01FF(cr)**

The command asks the analog input module in slot 1 of the system at address 01h to send the status of its input channels. The analog input module responds that all its multiplex channels are enabling (FF equals 1111 and 1111).

#aaSi

Name All Analog Data In

Description Returns the input value of all channels for a specified analog input module of a specified system in engineering unit only.

Syntax **#aaSi(cr)**

is a delimiter character.

aa (range 00-FF) represents the 2-character hexadecimal Modbus network address of the ADAM-5000/TCP system you want to interrogate.

Si is the I/O slot of ADAM-5000/TCP system you want to read.

(cr) is the terminating character, carriage return (0Dh)

Response **>(data) (data) (data) (data) (data) (data) (data) (data) (cr)** if the command is valid.

?aa(cr) if an invalid operation was entered.

There is no response if the module detects a syntax error or communication error or if the specified address does not exist.

> is a delimiter character indicating a valid command was received.

? delimiter character indicating the command was invalid.

(data) is the input value in engineering units of a channel in the interrogated module of the specified system. The (data) from all channels is shown in sequence from 7 to

0. If (data) = " ", it means the channel is invalid.

(cr) is the terminating character, carriage return (0Dh)

Example

command: **#01S1(cr)**

response: **+1.4567 +1.4852 +1.4675 +1.4325 +1.4889 +1.4235 +1.4787 +1.4625 (cr)**

The command requests the analog input module in slot 1 of the ADAM-5000/TCP system at address 01h to return the input values of all channels. The analog input module responds that input values of all channels are in sequence from 7 to 0: +1.4567, +1.4852, +1.4675, +1.4325, +1.4889, +1.4235, +1.4787 and +1.4625.

#aaSiCj

Name Specified Analog Data In

Description Returns the input value of a specified channel for a specified analog input module of a specified system in engineering unit only.

Syntax **#aaSiCj(cr)**

is a delimiter character.

aa (range 00-FF) represents the 2-character hexadecimal Modbus network address of the ADAM-5000/TCP system you want to interrogate.

Si identifies the I/O slot you want to interrogate.

Cj identifies the channel you want to read.

(cr) is the terminating character, carriage return (0Dh)

Response >(data) if the command is valid.

?aa(cr) if an invalid operation was entered.

There is no response if the module detects a syntax error or communication error or if the specified address does not exist.

> is a delimiter character indicating a valid command was received.

? delimiter character indicating the command was invalid.

(data) is the input value in engineering units of the specified channel for a specified analog input module of the specified system. If (data) = " ", it means the channel is invalid.

(cr) is the terminating character, carriage return (0Dh)

Example

command: **#01S2C2(cr)**

response: **>+1.4567**

The command requests the analog input module in slot 2 of the ADAM-5000/TCP system at address 01h to return the input value of channel 2.

The analog input module responds that the input value of channel 2 is +1.4567.

$aaSiER

Name Initialize EEPROM data

Description Initializes all EEPROM data in a specified analog input module to their default values. This command is sent following a failed attempt to calibrate a module (the module shows no effect from an attempted calibration). Following initialization, the problem module should readily accept calibration.

Syntax **$aaSiER(cr)**

$ is a delimiter character.

aa (range 00-FF) represents the 2-character hexadecimal Modbus network address of the ADAM-5000/TCP system.

Si identifies the I/O slot for which you wish to initialize all EEPROM data.

ER is Initialize all EEPROM data command.

(cr) is the terminating character, carriage return (0Dh)

Response **!aa(cr)** if the command is valid.

?aa(cr) if an invalid operation was entered.

There is no response if the module detects a syntax error or communication error or if the specified address does not exist.

! delimiter character indicating a valid command was received.

? delimiter character indicating the command was invalid.

aa (range 00-FF) represents the 2-character hexadecimal Modbus address of an ADAM-5000/TCP system.

(cr) is the terminating character, carriage return (0Dh

$aaSi0

Name	Span Calibration
Description	Calibrates a specified analog input module to correct for gain errors
Syntax	**$aaSi0(cr)**
	$ is a delimiter character.
	aa (range 00-FF) represents the 2-character hexadecimal address of the ADAM-5000/TCP system which is to be calibrated.
	Si identifies the I/O slot which is to be calibrated.
	0 represents the span calibration command.
	(cr) is the terminating character, carriage return (0Dh)
Response	**!aa(cr)** if the command is valid.
	?aa(cr) if an invalid operation was entered.
	There is no response if the module detects a syntax error or communication error or if the specified address does not exist.
	! delimiter character indicating a valid command was received.
	? delimiter character indicating the command was invalid.
	aa (range 00-FF) represents the 2-character hexadecimal address of an ADAM-5000/TCP system.
	(cr) is the terminating character, carriage return (0Dh)

Note: In order to successfully calibrate an analog input module's input range, a proper calibration input signal should be connected to the analog input module before and during the calibration process.

$aaSi1

Name	Zero Calibration
Description	Calibrates a specified analog input module to correct for offset errors
Syntax	**$aaSi1(cr)**
	$ is a delimiter character.
	aa (range 00-FF) represents the 2-character hexadecimal address of the ADAM-5000/TCP system which is to be calibrated.
	Si identifies the I/O slot which is to be calibrated.
	1 represents the zero calibration command.
	(cr) is the terminating character, carriage return (0Dh)
Response	**!aa(cr)** if the command is valid.
	?aa(cr) if an invalid operation was entered.
	There is no response if the module detects a syntax error or communication error or if the specified address does not exist.
	! delimiter character indicating a valid command was received.
	? delimiter character indicating the command was invalid.
	aa (range 00-FF) represents the 2-character hexadecimal address of an ADAM-5000/TCP system.
	(cr) is the terminating character, carriage return (0Dh)

Note: In order to successfully calibrate an analog input module's input range, a proper calibration input signal should be connected to the analog input module before and during the calibration process.

$aaSi3

Name CJC Status Command (ADAM-5018 only)

Description Returns the value of the CJC (Cold Junction Compensation) sensor for a specified analog input module

Syntax **$aaSi3(cr)**

$ is a delimiter character.

aa (range 00-FF) represents the 2-character hexadecimal address of the ADAM-5000/TCP system.

Si identifies the I/O slot which contains the CJC Status you wish to retrieve.

3 is CJC Status command.

(cr) is the terminating character, carriage return (0Dh)

Response **>(data)(cr)** if the command is valid.

?aa(cr) if an invalid operation was entered.

There is no response if the module detects a syntax error or communication error or if the specified address does not exist.

>delimiter character indicating a valid command was received.

? delimiter character indicating the command was invalid.

aa (range 00-FF) represents the 2-character hexadecimal address of an ADAM-5000/TCP system.

(data) is the value that is retrieved by the module by reading its CJC sensor. The data format, in degrees Celsius, consists of a "+" or "-" sign followed by five decimal digits and a fixed decimal point. The resolution of the data is 0.1°C.

(cr) is the terminating character, carriage return (0Dh)

Example command: **$01S13(cr)**

response: **>+0136.8(cr)**

The command requests the analog input module in slot 1 of the ADAM-5000/TCP system at address 01h to read its CJC sensor and return the data. The analog input module responds with 36.8°C.

$aaSi9shhhh

Name CJC Zero Calibration (ADAM-5018 only)

Description Calibrates an analog input module to adjust for offset errors of its CJC (Cold Junction Compensation) sensor

Syntax **$aaSi9shhhh(cr)**

$ is a delimiter character.

aa (range 00-FF) represents the 2-character hexadecimal address of the ADAM-5000/TCP system.

Si identifies the I/O slot which contains the CJC Status you wish to retrieve.

9 is CJC Status command.

s sign, + or -, indicates whether to increase or decrease the CJC offset value.

hhhh is a four character hexadecimal "count" value. Each count equals approximately 0.009°C. The value can range from 0000 to FFFF.

(cr) is the terminating character, carriage return (0Dh)

Response **!aa(cr)** if the command is valid.

?aa(cr) if an invalid operation was entered.

There is no response if the module detects a syntax error or communication error or if the specified address does not exist.

! delimiter character indicating a valid command was received.

? delimiter character indicating the command was invalid.

aa (range 00-FF) represents the 2-character hexadecimal address of an ADAM-5000/TCP system.

(cr) is the terminating character, carriage return (0Dh)

Example command: **$01S29+0042(cr)**

response: **!01(cr)**

The command increases the CJC offset value of the analog input module in slot 2 of the system at address 01h with 66 counts (42 hex) which equals about 0.6°C.

Note: An analog input module requires a maximum of 2 seconds to perform auto calibration and ranging after it receives a CJC Calibration command. During this interval, the module cannot be addressed to perform any other actions.

ADAM-5017H Analog Input Command Set

Command Syntax	Command Name	Description
$aaSiCjArrFF	Set Input Range	Sets input range for a specified channel of an analog input module in a specified system
$aaSiCjB	Read Input Range	Returns the input range for a specified channel of a specified analog input module in a specified system
$aaSiAFFff	Set Data Format	Sets data format in engineering units or two's complement for a specified analog input module in a specified system
$aaSiB	Read Data Format	Returns the data format for a specified analog input module in a specified system
$aaSi5mm	Enable/Disable Channels for Multiplexing	Enables/Disables multiplexing for separate channels of the specified input module
$aaSi6	Read Channels Status	Asks the specified input module to return the status of all channels

Command Syntax	Command Name	Description
#aaSi	All Analog Data In	Returns the input value of all channels for a specified analog input module of a specified system in currently configured data format
#aaSiCj	Specified Analog Data In	Returns the input value of a specified channel of a specified analog input module of a specified system in currently configured data format
$aaSiER	Initialize EEPROM Data	Initializes all EEPROM data in a specified analog input module to their default values.
$aaSi0	Span Calibration	Calibrates a specified analog input module to correct for gain errors
$aaSi1	Zero Calibration	Calibrates a specified analog input module to correct for offset errors

Table 6-6: ADAM-5017H Analog Input command Set Table

Note: The command sets " $aasi5mm, $aasi6, $aasi0, $aasi1" for ADAM-5017H are the same with ADAM-5017. Please refer the preceding pages to learn the detail.

$aaSiCjArrFF

Name Set Input Range

Description Sets the input range for a specified channel of a specified analog input module in a specified system.

Syntax **$aaSiCjArrFF**

$ is a delimiter character.

aa (range 00-FF) represents the 2-character hexadecimal address of the ADAM-5000/TCP system you want to configure.

SiCj identifies the slot i (i:0 to 7) of the ADAM-5000/TCP system and the channel j (j:0 to 7) of the ADAM-5017H whose range you want to set.

A represents the set input range command.

rr represents the 2-character hexadecimal code of the input range. (See Appendix B)

(cr) is the terminating character, carriage return (0Dh).

Note: Each channel in a ADAM-5017H module may be set to a different range, but the data formats of all channels in this module must be the same.

Response **!aa(cr)** if the command is valid.

?aa(cr) if an invalid operation was entered.

There is no response if the module detects a syntax error or communication error or if the specified address does not exist.

! delimiter character indicating a valid command was received.

? delimiter character indicating the command was invalid.

aa (range 00-FF) represents the 2-character hexadecimal address of an ADAM-5000/TCP system.

(cr) is the terminating character, carriage return (0Dh).

Example command: **$01S3C1A0bFF(cr)**

response: **!01(cr)**

Channel 1 of the ADAM-5017H module in slot 3 of the ADAM-5000/TCP system at address 01h is set to the input range 0-20 mA, engineering unit data format. The response indicates that the command has been received as a valid command.

$aaSiCjB

Name Read Input Range

Description Returns the input range in engineering units for a specified channel of a specified analog input module in a specified system.

Syntax **$aaSiCjB**

$ is a delimiter character.

aa (range 00-FF) represents the 2-character hexadecimal address of the ADAM-5000/TCP system you want to interrogate.

SiCj identifies the slot i (i:0 to 7) of the ADAM-5000/TCP system and the channel j (j:0 to 7) of the ADAM-5017H module you want to interrogate.

B represents the read input range command.

(cr) is the terminating character, carriage return (0Dh).

Response **!aarr00(cr)** if the command is valid.

?aa(cr) if an invalid operation was entered.

There is no response if the module detects a syntax error or communication error or if the specified address does not exist.

! delimiter character indicating a valid command was received.

? delimiter character indicating the command was invalid.

aa (range 00-FF) represents the 2-character hexadecimal address of an ADAM-5000/TCP system.

rr represents the 2-character hexadecimal code of the input range. (See Appendix B)

(cr) is the terminating character, carriage return (0Dh).

Example command: **$01S3C1B(cr)**

response: **!010b00(cr)**

Channel 1 of the ADAM-5017H module in slot 3 of the ADAM-5000/TCP system at address 01h responds with an input range 0-20 mA, engineering unit data format.

$aaSiAFFff

Name Set Data Format

Description Sets the data format in engineering units or in two's complement format for a specified analog input module in a specified system.

Syntax **$aaSiAFFff**

$ is a delimiter character.

aa (range 00-FF) represents the 2-character hexadecimal address of the ADAM-5000/TCP system you want to configure.

Si identifies the I/O slot of the ADAM-5000/TCP system containing the ADAM-5017H module you want to configure.

AFF represents the set data format command.

ff represents the 2-character hexadecimal code of the data format. 00 is for engineering unit format. 02 is for two's complement format.

(cr) is the terminating character, carriage return (0Dh).

Note: Each channel in an ADAM-5017H module may be set to a different range, but the data formats of all channels in this module must be the same.

Response **!aa(cr)** if the command is valid.

?aa(cr) if an invalid operation was entered.

There is no response if the module detects a syntax error or communication error or if the specified address does not exist.

! delimiter character indicating a valid command was received.

? delimiter character indicating the command was invalid.

aa (range 00-FF) represents the 2-character hexadecimal address of an ADAM-5000/TCP system.

(cr) is the terminating character, carriage return (0Dh).

Example command: **$01S3AFF00(cr)**

response: **!01(cr)**

The data format of the ADAM-5017H module in slot 3 of the ADAM-5000/TCP system at address 01h is configured for engineering unit format. The response indicates that the command has been received as a valid command.

$aaSiB

Name Read Data Format

Description Returns the data format for a specified analog input module in a specified system.

Syntax **$aaSiB**

$ is a delimiter character.

aa (range 00-FF) represents the 2-character hexadecimal address of the ADAM-5000/TCP system you want to interrogate.

Si identifies the I/O slot of the ADAM-5000/TCP system containing the ADAM-5017H module you want to interrogate.

B represents the read data format command.

(cr) is the terminating character, carriage return (0Dh).

Response **!aaFFff(cr)** if the command is valid.

?aa(cr) if an invalid operation was entered.

There is no response if the module detects a syntax error or communication error or if the specified address does not exist.

! delimiter character indicating a valid command was received.

? delimiter character indicating the command was invalid.

aa (range 00-FF) represents the 2-character hexadecimal address of an ADAM-5000/TCP system.

ff represents the 2-character hexadecimal code of the data format. 00 is for engineering unit format. 02 is for two's complement format.

(cr) is the terminating character, carriage return (0Dh).

Example command: **$01S3B(cr)**

response: **!01FF00(cr)**

The ADAM-5017H module in slot 3 of the ADAM-5000/TCP system at address 01h responds that it is configured for engineering unit data format.

#aaSi

Name All Analog Data In

Description Returns the input value of all channels for a specified analog input module of a specified system in engineering units or two's complement data format

Syntax **#aaSi**

is a delimiter character.

aa (range 00-FF) represents the 2-character hexadecimal Modbus network address of the ADAM-5000/TCP system you want to interrogate.

Si identifies the I/O slot (i:0 to 7) of ADAM-5000/TCP system you want to read.

(cr) is the terminating character, carriage return (0Dh).

Response **!(data)(data)(data)(data) (data)(data)(data)(data)(cr)** if the command is valid. (Engineering Unit Data Format)

!(dddd)(dddd)(dddd)(dddd)(dddd)(dddd)(dddd)(dddd)(cr) if the command is valid. (Two's Complement Data Format)

?aa(cr) if an invalid operation was entered.

There is no response if the module detects a syntax error or communication error or if the specified address does not exist.

! delimiter character indicating a valid command was received.

? delimiter character indicating the command was invalid.

(data) is the input value in engineering units of the interrogated module of the specified system. The (data) from all channels is shown in sequence from 7 to 0. If (data)=" ", it means the channel is invalid.

(dddd) is the input value in two's complement format of the interrogated module of the specified system. The (dddd) from all channels is shown in sequence from 7 to 0. If (dddd)=" ", it means the channel is invalid.

(cr) is the terminating character, carriage return (0Dh).

Example

command: **#01S3(cr)**

response: **+6.000 +7.000 +8.125 +4.250 +10.000 +8.500 +7.675 +5.445 (cr)**

The command requests the ADAM-5017H module in slot 3 of the ADAM-5000/TCP system at address 01h to return the input values of all channels. The analog input module responds with the input values of all channels, in sequence from 0 to 7: **+6.000, +7.000, +8.125, +4.250, +10.000, +8.500, +7.675, +5.445.**

#aaSiCj

Name Specified Analog Data In

Description Returns the input value of a specified channel of a specified analog input module in a specified ADAM-5000/TCP system in engineering units or two's complement data format

Syntax **#aaSiCj(cr)**

is a delimiter character.

aa (range 00-FF) represents the 2-character hexadecimal Modbus network address of the ADAM-5000/TCP system you want to configure.

Si identifies the I/O slot (i:0 to 7) of ADAM-5000/TCP system you want to read.

Cj identifies the channel you want to read.

(cr) is the terminating character, carriage return (0Dh).

Response **!(data)(cr)** if the command is valid. (Engineering Unit Data Format)

!(dddd)(cr) if the command is valid. (Two's Complement Data Format)

if an invalid operation was entered.

There is no response if the module detects a syntax error or communication error or if the specified address does not exist.

! delimiter character indicating a valid command was received.

? delimiter character indicating the command was invalid.

(data) is the input value in engineering units of the specified channel of the specified analog input module.

If (data)=" ", it means the channel is invalid.

(dddd) is the input value in two's complement format of the specified channel of the specified module. If (dddd)=" ", it means the channel is invalid.

(cr) is the terminating character, carriage return (0Dh).

Example

command: **#01S3C2(cr)**

response: **+9.750 (cr)**

The command requests the ADAM-5017H module in slot 3 of the ADAM-5000/TCP system at address 01h to return the input value of channel 2.

The analog input module responds that the input value of channel 2 is **+9.750**.

Analog Input Alarm Command Set

Command Syntax	Command Name	Description
$aaSiCjAhs	Set Alarm Mode	Sets the High/Low alarm in either Momentary or Latching mode
$aaSiCjAh	Read Alarm Mode	Returns the alarm mode for the specified channel.
$aaSiCjAhEs	Enable/Disable Alarm	Enables or Disables the High/Low alarm of the specified channel
$aaSiCjCh	Clear Latch Alarm	Resets a latched alarm
$aaSiCjAhCSkCn	Set Alarm Connection	Connects the High/Low alarm of a specified input channel to a specified digital output channel
$aaSiCjRhC	Read Alarm Connection	Returns the alarm limit output connection of a specified input channel
$aaSiCjAhU(data)	Set Alarm Limit	Sets the High/Low alarm limit value for the specified input channel
$aaSiCjRhU	Read Alarm Limit	Returns the High/Low alarm limit value for the specified input channel
$aaSiCjS	Read Alarm Status	Reads whether an alarm occurred for a specified input channel

Table 6-7 Analog Input alarm command set table

Note: This command set applies to the ADAM-5013, ADAM-5017, ADAM-5017H and the ADAM-5018.

$aaSiCjAhs

Name Set Alarm Mode

Description Sets the High/Low alarm of the specified input channel in the addressed ADAM-5000/TCP system to either Latching or Momentary mode.

Syntax **$aaSiCjAhs(cr)**

$ is a delimiter character.

aa (range 00-FF) represents the 2-character hexadecimal Modbus network address of anADAM-5000/TCP system.

SiCj identifies the desired slot i (i : 0 to 7) and the desired channel j (j : 0 to 7).

Ahs is the Set Alarm Mode command.

h indicates alarm type and can have the value H = High alarm, L = Low alarm

s indicates alarm mode and can have the value M = Momentary mode, L = Latching mode

(cr) represents terminating character, carriage return (0Dh)

Response **!aa(cr)** if the command was valid

There is no response if the system detects a syntax error or communication error or if the specified address does not exist.

! delimiter character indicating a valid command was received.

aa represents the 2-character hexadecimal address of the corresponding ADAM-5000/TCP system.

(cr) represents terminating character, carriage return (0Dh)

Example

command: **$01S0C1AHL(cr)**

response: **!01(cr)**

Channel 1 of slot 0 in the ADAM-5000/TCP system at address 01h is instructed to set its High alarm in Latching mode.

The module confirms that the command has been received.

$aaSiCjAh

Name Read Alarm Mode

Description Returns the alarm mode for the specified channel in the specified ADAM-5000/TCP system.

Syntax **$aaSiCjAh(cr)**

$ is a delimiter character.

aa (range 00-FF) represents the 2-character hexadecimal Modbus network address of an ADAM-5000/TCP system.

SiCj identifies the desired slot i (i : 0 to 7) and the desired channel j (j : 0 to 7).

Ah is the Read Alarm Mode command.

h indicates alarm type and can have the value H = High alarm, L = Low alarm

(cr) represents terminating character, carriage return (0Dh)

Response **!aas(cr)** if the command was valid

There is no response if the system detects a syntax error or communication error or if the specified address does not exist.

! delimiter character indicating a valid command was received.

aa represents the 2-character hexadecimal address of the corresponding ADAM-5000/TCP system.

s indicates alarm mode and can have the value M = Momentary mode, L = Latching mode

(cr) represents terminating character, carriage return (0Dh)

Example

command: **$01S0C1AL(cr)**

response: **!01M(cr)**

Channel 1 of slot 0 in the ADAM-5000/TCP system at address 01h is instructed to return its Low alarm mode.

The system responds that it is in Momentary mode.

$aaSiCjAhEs

Name Enable/Disable Alarm

Description Enables/Disables the High/Low alarm of the specified input channel in the addressed ADAM-5000/TCP system

Syntax **$aaSiCjAhEs(cr)**

$ is a delimiter character.

aa (range 00-FF) represents the 2-character hexadecimal Modbus network address of an ADAM-5000/TCP system.

SiCj identifies the desired slot i (i : 0 to 7) and the desired channel j (j : 0 to 7).

AhEs is the Set Alarm Mode command.

h indicates alarm type and can have the value H = High alarm, L = Low alarm

s indicates alarm enable/disable and can have the value E = Enable, D = Disable

(cr) represents terminating character, carriage return (0Dh)

Response **!aa(cr)** if the command was valid

There is no response if the system detects a syntax error or communication error or if the specified address does not exist.

! delimiter character indicating a valid command was received.

aa represents the 2-character hexadecimal address of the corresponding ADAM-5000/TCP system.

(cr) represents terminating character, carriage return (0Dh)

Example

command: **$01S0C1ALEE(cr)**

response: **!01(cr)**

Channel 1 of slot 0 in the ADAM-5000/TCP system at address 01h is instructed to enable its Low alarm function.

The module confirms that its Low alarm function has been enabled.

Note: An analog input module requires a maximum of 2 seconds after it receives an Enable/Disable Alarm command to let the setting take effect. During this interval, the module cannot be addressed to perform any other actions.

$aaSiCjCh

Name Clear Latch Alarm

Description Sets the High/Low alarm to OFF (no alarm) for the specified input channel in the addressed ADAM-5000/TCP system

Syntax **$aaSiCjCh(cr)**

$ is a delimiter character.

aa (range 00-FF) represents the 2-character hexadecimal Modbus network address of an ADAM-5000/TCP system.

SiCj identifies the desired slot i (i : 0 to 7) and the desired channel j (j : 0 to 7).

Ch is the Clear Latch Alarm command.

h indicates alarm type and can have the value H = High alarm, L = Low alarm

(cr) represents terminating character, carriage return (0Dh)

Response **!aa(cr)** if the command was valid

There is no response if the system detects a syntax error or communication error or if the specified address does not exist.

! delimiter character indicating a valid command was received.

aa represents the 2-character hexadecimal Modbus network address of the corresponding ADAM-5000 system.

(cr) represents terminating character, carriage return (0Dh)

Example

command: **$01S0C1CL(cr)**

response: **!01(cr)**

Channel 1 of slot 0 in the ADAM-5000/TCP system at address 01h is instructed to set its Low alarm state to OFF.

The system confirms it has done so accordingly.

$aaSiCjAhCSkCn

Name Set Alarm Connection

Description Connects the High/Low alarm of the specified input channel to the specified digital output in the addressed ADAM-5000/TCP system

Syntax **$aaSiCjAhCSkCn(cr)**

$ is a delimiter character.

aa (range 00-FF) represents the 2-character hexadecimal Modbus network address of an ADAM-5000/TCP system.

SiCj identifies the desired slot i (i : 0 to 7) and the desired analog input channel j (j : 0 to 7).

AhC is the Set Alarm Connection command.

h indicates alarm type and can have the value H = High alarm, L = Low alarm

SkCn identifies the desired slot k (k : 0 to 7) and the desired digital output point n (n : 0 to F). To disconnect the digital output, k and n should be set as '*'.

(cr) represents terminating character, carriage return (0Dh)

Response **!aa(cr)** if the command was valid

There is no response if the system detects a syntax error or communication error or if the specified address does not exist.

! delimiter character indicating a valid command was received.

aa represents the 2-character hexadecimal Modbus network address of the corresponding ADAM-5000/TCP system.

(cr) represents terminating character, carriage return (0Dh)

Example

command: **$01S0C1ALCS1C0(cr)**

response: **!01(cr)**

Channel 1 of slot 0 in the ADAM-5000/TCP system at address 01h is instructed to connect its Low alarm to the digital output of point 0 of slot 1 in the same ADAM-5000/TCP system.

The system confirms it has done so accordingly.

$aaSiCjRhC

Name Read Alarm Connection

Description Returns the High/Low alarm limit output connection of a specified input channel in the addressed ADAM-5000/TCP system

Syntax **$aaSiCjRhC(cr)**

$ is a delimiter character.

aa (range 00-FF) represents the 2-character hexadecimal Modbus address of an ADAM-5000/TCP system.

SiCj identifies the desired slot i (i : 0 to 7) and the desired analog input channel j (j : 0 to 7).

RhC is the Read Alarm Connection command.

h indicates alarm type and can have the value H = High alarm, L = Low alarm

(cr) represents terminating character, carriage return (0Dh)

Response **!aaSkCn(cr)** if the command was valid

There is no response if the system detects a syntax error or communication error or if the specified address does not exist.

! delimiter character indicating a valid command was received.

aa represents the 2-character hexadecimal Modbus network address of the corresponding ADAM-5000/TCP system.

SkCn identifies the desired slot k (k : 0 to 7) and the desired digital output point n (n : 0 to F) to which the input alarm is connected. If the values of k and n are '*', the analog input has no connection with a digital output point.

(cr) represents terminating character, carriage return (0Dh)

Example

command: **$01S0C1RLC(cr)**

response: **!01S1C0(cr)**

Channel 1 of slot 0 in the ADAM-5000/TCP system at address 01h is instructed to read its Low alarm output connection.

The system responds that the Low alarm output connects to the digital output at point 0 of slot 1 in the same ADAM-5000/TCP system.

$aaSiCjAhU(data)

Name Set Alarm Limit

Description Sets the High/Low alarm limit value for the specified input channel of a specified ADAM-5000/TCP system.

Syntax **$aaSiCjAhU(data)(cr)**

$ is a delimiter character.

aa (range 00-FF) represents the 2-character hexadecimal Modbus network address of an ADAM-5000/TCP system.

SiCj identifies the desired slot i (i : 0 to 7) and the desired analog input channel j (j : 0 to 7).

AhU is the Set Alarm Limit command.

h indicates alarm type and can have the value H = High alarm, L = Low alarm

(data) represents the desired alarm limit setting. The format is always in engineering units.

(cr) represents terminating character, carriage return (0Dh)

Response **!aa(cr)** if the command was valid

There is no response if the system detects a syntax error or communication error or if the specified address does not exist.

! delimiter character indicating a valid command was received.

aa represents the 2-character hexadecimal Modbus network address of the corresponding ADAM-5000/TCP system.

(cr) represents terminating character, carriage return (0Dh)

Example

command: **$01S0C1AHU+080.00(cr)**

response: **!01(cr)**

Channel 1 of slot 0 in the ADAM-5000/TCP system at address 01h is configured to accept type-T thermocouple input. The command will set its High alarm limit to +80°C.

The system confirms the command has been received.

Note: An analog input module requires a maximum of 2 seconds after it receives a Set Alarm Limit command to let the settings take effect. During this interval, the module cannot be addressed to perform any other actions.

$aaSiCjRhU

Name	Read Alarm Limit
Description	Returns the High/Low alarm limit value for the specified input channel in the addressed ADAM-5000/TCP system
Syntax	**$aaSiCjRhU(cr)** **$** is a delimiter character. **aa** (range 00-FF) represents the 2-character hexadecimal Modbus network address of an ADAM-5000/TCP system. **SiCj** identifies the desired slot i (i : 0 to 7) and the desired analog input channel j (j : 0 to 7). **RhU** is the Read Alarm Limit command. **h** indicates alarm type and can have the value H = High alarm, L = Low alarm **(cr)** represents terminating character, carriage return (0Dh)
Response	**!aa(data)(cr)** if the command was valid There is no response if the system detects a syntax error or communication error or if the specified address does not exist. **!** delimiter character indicating a valid command was received. **aa** represents the 2-character hexadecimal Modbus network address of the corresponding ADAM-5000/TCP system. **(data)** represents the desired alarm limit setting. The format is always in engineering units. **(cr)** represents terminating character, carriage return (0Dh)

Example

command: **$01S0C1RHU(cr)**

response: **!01+2.0500(cr)**

Channel 1 of slot 0 in the ADAM-5000/TCP system at address 01h is configured to accept 5V input. The command instructs the system to return the High alarm limit value for that channel.

The system responds that the High alarm limit value in the desired channel is 2.0500 V.

$aaSiCjS

Name	Read Alarm Status
Description	Reads whether an alarm occurred for the specified input channel in the specified ADAM-5000/TCP system
Syntax	**$aaSiCjS(cr)** **$** is a delimiter character. **aa** (range 00-FF) represents the 2-character hexadecimal Modbus network address of an ADAM-5000/TCP system. **SiCj** identifies the desired slot i (i : 0 to 7) and the desired analog input channel j (j : 0 to 7). **S** is the Read Alarm Status command. **(cr)** represents terminating character, carriage return (0Dh)
Response	**!aahl(cr)** if the command was valid There is no response if the system detects a syntax error or communication error or if the specified address does not exist. **!** delimiter character indicating a valid command was received. **aa** represents the 2-character hexadecimal address Modbus of the corresponding ADAM-5000/TCP system. **h** represents the status of High alarm. ‘1’ means the High alarm occurred, ‘0’ means it did not occur. **l** represents the status of Low alarm. ‘1’ means the Low alarm occurred, ‘0’ means it did not occur. **(cr)** represents terminating character, carriage return (0Dh)

Example

command: **$01S0C1S(cr)**

response: **!0101(cr)**

The command instructs the system at address 01h to return its alarm status for channel 1 of slot 0.

The system responds that a High alarm has not occurred and that a Low alarm has occurred.

Analog Input Alarm Command Set

Command Syntax	Command Name	Description
$aaSiCjAhs	Set Alarm Mode	Sets the High/Low alarm in either Momentary or Latching mode
$aaSiCjAh	Read Alarm Mode	Returns the alarm mode for the specified channel.
$aaSiCjAhEs	Enable/Disable Alarm	Enables or Disables the High/Low alarm of the specified channel
$aaSiCjCh	Clear Latch Alarm	Resets a latched alarm
$aaSiCjAhCSk-Cn	Set Alarm Connection	Connects the High/Low alarm of a specified input channel to a specified digital output channel
$aaSiCjRhC	Read Alarm Connection	Returns the alarm limit output connection of a specified input channel
$aaSiCjAhU(da-ta)	Set Alarm Limit	Sets the High/Low alarm limit value for the specified input channel
$aaSiCjRhU	Read Alarm Limit	Returns the High/Low alarm limit value for the specified input channel
$aaSiCjS	Read Alarm Status	Reads whether an alarm occurred for a specified input channel

Table 6-8 Analog Input alarm command set table

Note: This command set applies to the ADAM-5013, ADAM-5017, ADAM-5017H and the ADAM-5018.

$aaSiCjAhs

Name Set Alarm Mode

Description Sets the High/Low alarm of the specified input channel in the addressed ADAM-5000/TCP system to either Latching or Momentary mode.

Syntax **$aaSiCjAhs(cr)**

$ is a delimiter character.

aa (range 00-FF) represents the 2-character hexadecimal Modbus network address of anADAM-5000/TCP system.

SiCj identifies the desired slot i (i : 0 to 7) and the desired channel j (j : 0 to 7).

Ahs is the Set Alarm Mode command.

h indicates alarm type and can have the value H = High alarm, L = Low alarm

s indicates alarm mode and can have the value M = Momentary mode, L = Latching mode

(cr) represents terminating character, carriage return (0Dh)

Response **!aa(cr)** if the command was valid

There is no response if the system detects a syntax error or communication error or if the specified address does not exist.

! delimiter character indicating a valid command was received.

aa represents the 2-character hexadecimal address of the corresponding ADAM-5000/TCP system.

(cr) represents terminating character, carriage return (0Dh)

Example

command: **$01S0C1AHL(cr)**

response: **!01(cr)**

Channel 1 of slot 0 in the ADAM-5000/TCP system at address 01h is instructed to set its High alarm in Latching mode.

The module confirms that the command has been received.

$aaSiCjAh

Name Read Alarm Mode

Description Returns the alarm mode for the specified channel in the specified ADAM-5000/TCP system.

Syntax **$aaSiCjAh(cr)**

$ is a delimiter character.

aa (range 00-FF) represents the 2-character hexadecimal Modbus network address of an ADAM-5000/TCP system.

SiCj identifies the desired slot i (i : 0 to 7) and the desired channel j (j : 0 to 7).

Ah is the Read Alarm Mode command.

h indicates alarm type and can have the value H = High alarm, L = Low alarm

(cr) represents terminating character, carriage return (0Dh)

Response **!aas(cr)** if the command was valid

There is no response if the system detects a syntax error or communication error or if the specified address does not exist.

! delimiter character indicating a valid command was received.

aa represents the 2-character hexadecimal address of the corresponding ADAM-5000/TCP system.

s indicates alarm mode and can have the value M = Momentary mode, L = Latching mode

(cr) represents terminating character, carriage return (0Dh)

Example

command: **$01S0C1AL(cr)**

response: **!01M(cr)**

Channel 1 of slot 0 in the ADAM-5000/TCP system at address 01h is instructed to return its Low alarm mode.

The system responds that it is in Momentary mode.

$aaSiCjAhEs

Name	Enable/Disable Alarm
Description	Enables/Disables the High/Low alarm of the specified input channel in the addressed ADAM-5000/TCP system
Syntax	**$aaSiCjAhEs(cr)** **$** is a delimiter character. **aa** (range 00-FF) represents the 2-character hexadecimal Modbus network address of an ADAM-5000/TCP system. **SiCj** identifies the desired slot i (i : 0 to 7) and the desired channel j (j : 0 to 7). **AhEs** is the Set Alarm Mode command. **h** indicates alarm type and can have the value H = High alarm, L = Low alarm **s** indicates alarm enable/disable and can have the value E = Enable, D = Disable **(cr)** represents terminating character, carriage return (0Dh)
Response	**!aa(cr)** if the command was valid There is no response if the system detects a syntax error or communication error or if the specified address does not exist. **!** delimiter character indicating a valid command was received. **aa** represents the 2-character hexadecimal address of the corresponding ADAM-5000/TCP system. **(cr)** represents terminating character, carriage return (0Dh)

Example

command: **$01S0C1ALEE(cr)**

response: **!01(cr)**

Channel 1 of slot 0 in the ADAM-5000/TCP system at address 01h is instructed to enable its Low alarm function.

The module confirms that its Low alarm function has been enabled.

Note: An analog input module requires a maximum of 2 seconds after it receives an Enable/Disable Alarm command to let the setting take effect. During this interval, the module cannot be addressed to perform any other actions.

$aaSiCjCh

Name Clear Latch Alarm

Description Sets the High/Low alarm to OFF (no alarm) for the specified input channel in the addressed ADAM-5000/TCP system

Syntax **$aaSiCjCh(cr)**

$ is a delimiter character.

aa (range 00-FF) represents the 2-character hexadecimal Modbus network address of an ADAM-5000/TCP system.

SiCj identifies the desired slot i (i : 0 to 7) and the desired channel j (j : 0 to 7).

Ch is the Clear Latch Alarm command.

h indicates alarm type and can have the value H = High alarm, L = Low alarm

(cr) represents terminating character, carriage return (0Dh)

Response **!aa(cr)** if the command was valid

There is no response if the system detects a syntax error or communication error or if the specified address does not exist.

! delimiter character indicating a valid command was received.

aa represents the 2-character hexadecimal Modbus network address of the corresponding ADAM-5000 system.

(cr) represents terminating character, carriage return (0Dh)

Example

command: **$01S0C1CL(cr)**

response: **!01(cr)**

Channel 1 of slot 0 in the ADAM-5000/TCP system at address 01h is instructed to set its Low alarm state to OFF.

The system confirms it has done so accordingly.

$aaSiCjAhCSkCn

Name Set Alarm Connection

Description Connects the High/Low alarm of the specified input channel to the specified digital output in the addressed ADAM-5000/TCP system

Synta **$aaSiCjAhCSkCn (cr)**

$ is a delimiter character.

aa (range 00-FF) represents the 2-character hexadecimal Modbus network address of an ADAM-5000/TCP system.

SiCj identifies the desired slot i (i : 0 to 7) and the desired analog input channel j (j : 0 to 7).

AhC is the Set Alarm Connection command.

h indicates alarm type and can have the value H = High alarm, L = Low alarm

SkCn identifies the desired slot k (k : 0 to 7) and the desired digital output point n (n : 0 to F). To disconnect the digital output, k and n should be set as '*'.

(cr) represents terminating character, carriage return (0Dh)

Response **!aa(cr)** if the command was valid

There is no response if the system detects a syntax error or communication error or if the specified address does not exist.

! delimiter character indicating a valid command was received.

aa represents the 2-character hexadecimal Modbus network address of the corresponding ADAM-5000/TCP system.

(cr) represents terminating character, carriage return (0Dh)

Example

command: **$01S0C1ALCS1C0(cr)**

response: **!01(cr)**

Channel 1 of slot 0 in the ADAM-5000/TCP system at address 01h is instructed to connect its Low alarm to the digital output of point 0 of slot 1 in the same ADAM-5000/TCP system.

The system confirms it has done so accordingly.

$aaSiCjRhC

Name Read Alarm Connection

Description Returns the High/Low alarm limit output connection of a specified input channel in the addressed ADAM-5000/TCP system

Syntax **$aaSiCjRhC(cr)**

$ is a delimiter character.

aa (range 00-FF) represents the 2-character hexadecimal Modbus address of an ADAM-5000/TCP system.

SiCj identifies the desired slot i (i : 0 to 7) and the desired analog input channel j (j : 0 to 7).

RhC is the Read Alarm Connection command.

h indicates alarm type and can have the value H = High alarm, L = Low alarm

(cr) represents terminating character, carriage return (0Dh)

Response **!aaSkCn(cr)** if the command was valid

There is no response if the system detects a syntax error or communication error or if the specified address does not exist.

! delimiter character indicating a valid command was received.

aa represents the 2-character hexadecimal Modbus network address of the corresponding ADAM-5000/TCP system.

SkCn identifies the desired slot k (k : 0 to 7) and the desired digital output point n (n : 0 to F) to which the input alarm is connected. If the values of k and n are '*', the analog input has no connection with a digital output point.

(cr) represents terminating character, carriage return (0Dh)

Example

command: **$01S0C1RLC(cr)**

response: **!01S1C0(cr)**

Channel 1 of slot 0 in the ADAM-5000/TCP system at address 01h is instructed to read its Low alarm output connection.

The system responds that the Low alarm output connects to the digital output at point 0 of slot 1 in the same ADAM-5000/TCP system.

$aaSiCjAhU(data)

Name Set Alarm Limit

Description Sets the High/Low alarm limit value for the specified input channel of a specified ADAM-5000/TCP system.

Syntax **$aaSiCjAhU(data)(cr)**

$ is a delimiter character.

aa (range 00-FF) represents the 2-character hexadecimal Modbus network address of an ADAM-5000/TCP system.

SiCj identifies the desired slot i (i : 0 to 7) and the desired analog input channel j (j : 0 to 7).

AhU is the Set Alarm Limit command.

h indicates alarm type and can have the value H = High alarm, L = Low alarm

(data) represents the desired alarm limit setting. The format is always in engineering units.

(cr) represents terminating character, carriage return (0Dh)

Response **!aa(cr)** if the command was valid

There is no response if the system detects a syntax error or communication error or if the specified address does not exist.

! delimiter character indicating a valid command was received.

aa represents the 2-character hexadecimal Modbus network address of the corresponding ADAM-5000/TCP system.

(cr) represents terminating character, carriage return (0Dh)

Example

command: **$01S0C1AHU+080.00(cr)**

response: **!01(cr)**

Channel 1 of slot 0 in the ADAM-5000/TCP system at address 01h is configured to accept type-T thermocouple input. The command will set its High alarm limit to +80°C.

The system confirms the command has been received.

Note: An analog input module requires a maximum of 2 seconds after it receives a Set Alarm Limit command to let the settings take effect. During this interval, the module cannot be addressed to perform any other actions.

$aaSiCjRhU

Name Read Alarm Limit

Description Returns the High/Low alarm limit value for the specified input channel in the addressed ADAM-5000/TCP system

Syntax **$aaSiCjRhU(cr)**

$ is a delimiter character.

aa (range 00-FF) represents the 2-character hexadecimal Modbus network address of an ADAM-5000/TCP system.

SiCj identifies the desired slot i (i : 0 to 7) and the desired analog input channel j (j : 0 to 7).

RhU is the Read Alarm Limit command.

h indicates alarm type and can have the value H = High alarm, L = Low alarm

(cr) represents terminating character, carriage return (0Dh)

Response **!aa (data)(cr)** if the command was valid

There is no response if the system detects a syntax error or communication error or if the specified address does not exist.

! delimiter character indicating a valid command was received.

aa represents the 2-character hexadecimal Modbus network address of the corresponding ADAM-5000/TCP system.

(data) represents the desired alarm limit setting. The format is always in engineering units.

(cr) represents terminating character, carriage return (0Dh)

Example

command: **$01S0C1RHU(cr)**

response: **!01+2.0500(cr)**

Channel 1 of slot 0 in the ADAM-5000/TCP system at address 01h is configured to accept 5V input. The command instructs the system to return the High alarm limit value for that channel.

The system responds that the High alarm limit value in the desired channel is 2.0500 V.

$aaSiCjS

Name Read Alarm Status

Description Reads whether an alarm occurred for the specified input channel in the specified ADAM-5000/TCP system

Syntax **$aaSiCjS(cr)**

$ is a delimiter character.

aa (range 00-FF) represents the 2-character hexadecimal Modbus network address of an ADAM-5000/TCP system.

SiCj identifies the desired slot i (i : 0 to 7) and the desired analog input channel j (j : 0 to 7).

S is the Read Alarm Status command.

(cr) represents terminating character, carriage return (0Dh)

Response **!aahl(cr)** if the command was valid

There is no response if the system detects a syntax error or communication error or if the specified address does not exist.

! delimiter character indicating a valid command was received.

aa represents the 2-character hexadecimal address Modbus of the corresponding ADAM-5000/TCP system.

h represents the status of High alarm. ‘1’ means the High alarm occurred, ‘0’ means it did not occur.

l represents the status of Low alarm. ‘1’ means the Low alarm occurred, ‘0’ means it did not occur.

(cr) represents terminating character, carriage return (0Dh)

Example

command: **$01S0C1S(cr)**

response: **!0101(cr)**

The command instructs the system at address 01h to return its alarm status for channel 1 of slot 0.

The system responds that a High alarm has not occurred and that a Low alarm has occurred.

6-4-4 Analog Output Command Set

Command Syntax	Command Name	Description
$aaSiCjArrff	Configuration	"Sets the output range, data format and slew rate for a specified channel in a specified analog output module in a specified system."
$aaSiCjB	Configuration Status	"Returns the configuration parameters of a specified channel in a specified analog output module of a specified system."
#aaSiCj(data)	Analog Data Out	"Sends a digital value from the host computer to a specified channel of a specified slot in a specified ADAM-5000 system for output as an analog signal."
$aaSiCj4	"Start-Up Output Current/Voltage Configuration"	"Stores a default output value in a specified channel. The output value will take effect upon startup or reset."
$aaSiCj0	4 mA Calibration	"Directs the specified channel to store parameters followi ng a calibration for 4 mA output"
$aaSiCj1	20 mA Calibration	"Directs the specified channel to store parameters followi ng a calibration for 20 mA output"
$aaSiCj3hh	Trim Calibration	"Trims the specified channel a specified number of units up or down"
$aaSiCj6	Last Value Readback	"Returns either the last value sent to the specified channel by a #aaSiCj(data) command, or start-up output current/voltage."

Table 6-9: Analog Output command Set Table

$aaSiCjArrff

Name Configuration

Description Sets the output range, data format and slew rate for a specified channel of a specified analog output module in a specified system.

Syntax **$aaSiCjArrff(cr)**

$ is a delimiter character.

aa (range 00-FF) represents the 2-character hexadecimal address of the ADAM-5000/TCP system you want to configure.

SiCj identifies the I/O slot i (i : 0 to 7) and the channel j (j : 0 to 3) of the module you want to configure.

A is I/O module configuration command.

rr represents the 2-character hexadecimal code of the output range. (See Appendix B)

ff is a hexadecimal number that equals the 8-bit parameter representing the status of data format and slew rate. Bits 0 and 1 represent data format. Bits 2,3,4,5 represent slew rate. The layout of the 8-bit parameter is shown in Figure 6-4. The other bits are not used and are set to 0.

(cr) is the terminating character, carriage return (0Dh)

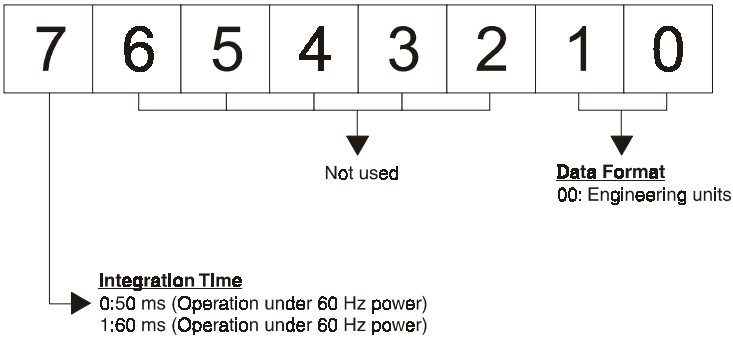

Figure 6-5: The other bits are not used and are set to 0.

Response

!aa(cr) if the command is valid.

?aa(cr) if an invalid operation was entered.

There is no response if the module detects a syntax error or communication error or if the specified address does not exist.

! delimiter character indicating a valid command was received.

? delimiter character indicating the command was invalid.

aa (range 00-FF) represents the 2-character hexadecimal address of an ADAM-5000/TCP system.

(cr) is the terminating character, carriage return (0Dh)

Example

command: **$01S3C0A3110(cr)**

response: **!01(cr)**

The analog output channel 0 in slot 3 of the ADAM-5000/TCP system at address 01h is configured to an output range 4 to 20mA, engineering units data format, and a slew rate of 1.0mA/sec. The response indicates that the command has been received.

Note: An analog output module requires a maximum of 20 milliseconds to perform auto calibration and ranging after it is reconfigured. During this time span, the module cannot be address to perform any other actions.

$aaSiCjB

Name Configuration Status

Description Returns the configuration parameters of a specified channel in a specified analog output module of a specified system.

Syntax **$aaSiCjB(cr)**

$ is a delimiter character.

aa (range 00-FF) represents the 2-character hexadecimal address of the ADAM-5000/TCP system you want to interrogate.

SiCj identifies the I/O slot i (i : 0 to 7) and the channel j (j: 0 to 3) you want to read.

B is configuration status command.

(cr) is the terminating character, carriage return (0Dh)

Response **!aarrff(cr)** if the command is valid.

?aa(cr) if an invalid operation was entered.

There is no response if the module detects a syntax error or communication error or if the specified address does not exist.

! delimiter character indicating a valid command was received.

? delimiter character indicating the command was invalid.

aa (range 00-FF) represents the 2-character hexadecimal address of an ADAM-5000/TCP system.

rr represents the 2-character hexadecimal code of the output range.

ff is a hexadecimal number that equals the 8-bit parameter representing the status of data format and slew rate. Bits 0 and 1 represent data format. Bits 2, 3, 4 and 5 represent slew rate. The other bits are not used and are set to 0. (See Configuration command $aaSiCjArrff)

(cr) is the terminating character, carriage return (0Dh)

Example command: **$01S1C1B**

response: **!013210**

The analog output channel 1 in slot 1 of the ADAM-5000/TCP system at address 01h responds with an output range 0 to 10V, engineering units data format, and a slew rate of 1.0mA/sec.

#aaSiCj(data)

Name Analog Data Out

Description Sends a digital value from the host computer to a specified channel of a specified slot in a specified ADAM-5000/TCP system for output as an analog signal. Upon receipt, the analog output module in the specified slot will output an analog signal corresponding to the digital value received.

Syntax **#aaSiCj(data)(cr)**

is a delimiter character.

aa (range 00-FF) represents the 2-character hexadecimal Modbus network address of the ADAM-5000/TCP system.

SiCj identifies the I/O slot i (i : 0 to 7) and the channel j (j : 0 to 3) of the analog output module that is to output an analog signal.

(data) is a digital value incoming to the module, which corresponds to the desired analog output value (always in engineering units) to be output from the module. The analog value output will depend on the module's range configuration. (See also Appendix B, Data Formats and I/O Ranges)

(cr) is the terminating character, carriage return (0Dh)

Response **>(cr)** if the command is valid.

?aa (cr) if a value was sent that is out of range. Note that when the analog output module receives such a value, it will try to use a value that is close to the one received, but within the module's configured range.

There is no response if the module detects a syntax error or communication error or if the specified address does not exist.

> is a delimiter character indicating a valid command was received.

? delimiter character indicating the command was invalid.

(cr) is the terminating character, carriage return (0Dh)

Example

command: **#01S1C115.000(cr)**

response: **>(cr)**

The command instructs the module in slot 1 of the ADAM-5000/TCP system at address 01h to output a value of 15 mA from it's channel 1. The module should be an analog output module with it's channel 1 configured for a range of 0-20 mA or 4-20 mA. If it is an analog output module configured for the range 0-10 V, it's output value will be 10 V and the response will be **?01(cr)**.

$aaSiCj4

Name Start-Up Output Current/Voltage Configuration

Description Stores a default output value in a specified channel. The output value will take effect upon startup or reset.

Syntax **$aaSiCj4(cr)**

$ is a delimiter character.

aa (range 00-FF) represents the 2-character hexadecimal address of the ADAM-5000/TCP system.

SiCj identifies the I/O slot i (i : 0 to 7) and the channel j (j: 0 to 3) of the module you want to set.

4 is the Start-Up Output Current/Voltage Configuration command.

(cr) is the terminating character, carriage return (0Dh)

Response **!aa(cr)** if the command is valid.

?aa(cr) if an invalid operation was entered.

There is no response if the module detects a syntax error or communication error or if the specified address does not exist.

! delimiter character indicating a valid command was received.

? delimiter character indicating the command was invalid.

aa (range 00-FF) represents the 2-character hexadecimal address of an ADAM-5000/TCP system.

(cr) is the terminating character, carriage return (0Dh)

Example command: **$01S1C14(cr)**

response: **!01(cr)**

Presume the present output value of channel 1 of slot 1 in the ADAM-5000/TCP system at address 01h is 9.4 mA. The command asks the analog output module to store the present output value in its non-volatile memory. When the system is powered up or reset, its default output value will be 9.4 mA.

The response from the ADAM-5000/TCP system at address 01h indicates the command has been received.

Note: An analog output module requires a maximum of 6 milliseconds after it receives a Startup Output Current/Voltage Configuration command to let the settings take effect. During this interval, the module cannot be addressed to perform any other actions.

$aaSiCj0

Name	4 mA Calibration
Description	Directs the specified channel to store parameters following a calibration for 4 mA output
Syntax	**$aaSiCj0(cr)** **$** is a delimiter character. **aa** (range 00-FF) represents the 2-character hexadecimal address of the ADAM-5000/TCP system. **SiCj** identifies the I/O slot i (i : 0 to 7) and the channel j (j : 0 to 3) of the module you want to calibrate. **0** is the 4 mA calibration command. **(cr)** is the terminating character, carriage return (0Dh)
Response	**!aa(cr)** if the command is valid. **?aa(cr)** if an invalid operation was entered. There is no response if the module detects a syntax error or communication error or if the specified address does not exist. **!** delimiter character indicating a valid command was received. **?** delimiter character indicating the command was invalid. **aa** (range 00-FF) represents the 2-character hexadecimal address of an ADAM-5000/TCP system. **(cr)** is the terminating character, carriage return (0Dh)

Note: Before issuing the 4 mA Calibration command, the analog output module should be trimmed to the correct value using the Trim Calibration command. Either a mA meter or a resistor and voltmeter should be connected to the module's output.

$aaSiCj1

Name	20 mA Calibration
Description	Directs the specified channel to store parameters following a calibration for 20 mA output
Syntax	**$aaSiCj1(cr)**
	$ is a delimiter character.
	aa (range 00-FF) represents the 2-character hexadecimal address of the ADAM-5000/TCP system.
	SiCj identifies the I/O slot i (i : 0 to 7) and the channel j (j : 0 to 3) of the module you want to calibrate.
	1 is the 20 mA calibration command.
	(cr) is the terminating character, carriage return (0Dh)
Response	**!aa(cr)** if the command is valid.
	?aa(cr) if an invalid operation was entered.
	There is no response if the module detects a syntax error or communication error or if the specified address does not exist.
	! delimiter character indicating a valid command was received.
	? delimiter character indicating the command was invalid.
	aa (range 00-FF) represents the 2-character hexadecimal address of an ADAM-5000/TCP system.
	(cr) is the terminating character, carriage return (0Dh)

Note: Before issuing the 20 mA Calibration command, the analog output module should be trimmed to the correct value using the Trim Calibration command. Either a mA meter or a resistor and voltmeter should be connected to the module's output.

$aaSiCj3hh

Name Trim Calibration

Description Trims the specified channel a specified number of units up or down

Syntax $aaSiCj3hh(cr)

$ is a delimiter character.

aa (range 00-FF) represents the 2-character hexadecimal address of the ADAM-5000/TCP system.

SiCj identifies the I/O slot i (i : 0 to 7) and the channel j (j : 0 to 3) of the module you want to calibrate.

3 is the trim calibration command.

hh is the 2-character twos complement hexadecimal value that represents the number of counts by which to increase or decrease the output current. Each count equals approximately 1.5µA. Values range from 00 to 5F and from A1 to FF (hexadecimal), where 00 represents 0 counts, 5F represents +95 counts, A1 represents -95 counts and FF represents -1 counts. Negative values decrease and positive numbers increase the output current according to the number of counts.

(cr) is the terminating character, carriage return (0Dh)

Response **!aa(cr)** if the command is valid.

There is no response if the module detects a syntax error or communication error or if the specified address does not exist.

! delimiter character indicating a valid command was received.

aa (range 00-FF) represents the 2-character hexadecimal address of an ADAM-5000/TCP system.

(cr) is the terminating character, carriage return (0Dh)

Example

command: **$01S1C2314(cr)**

response: **!01(cr)**

The command tells channel 2 of the analog output module in slot 1 of the ADAM-5000/TCP system at address 01h to increase its output value by 20 (14h) counts which is approximately 30 µA.

The analog output module confirms the increase.

Note: In order to perform a Trim Calibration, either a mA meter or a resistor and voltmeter should be connected to the module's output prior to calibration.

$aaSiCj6

Name Last Value Readback

Description Returns either the last value sent to the specified channel by a #aaSiCj(data) command, or the start-up output current/voltage.

Syntax **$aaSiCj6(cr)**

$ is a delimiter character.

aa (range 00-FF) represents the 2-character hexadecimal Modbus network address of the ADAM-5000/TCP system.

SiCj identifies the I/O slot i (i : 0 to 7) and the channel j (j : 0 to 3) for the module you want to return a prior value.

6 is the last value read-back command.

(cr) is the terminating character, carriage return (0Dh)

Response **!aa(data)(cr)** if the command is valid.

?aa(cr) if an invalid operation was entered.

There is no response if the module detects a syntax error or communication error or if the specified address does not exist.

! delimiter character indicating a valid command was received.

? delimiter character indicating the command was invalid.

aa (range 00-FF) represents the 2-character hexadecimal Modbus network address of an ADAM-5000/TCP system.

(data) is the value that is returned by the analog output module. The format of the data depends on the module's configuration data format.

(cr) is the terminating character, carriage return (0Dh)

Example

command: **$01S2C16(cr)**

response: **!0103.000(cr)**

The command tells channel 1 of the analog output module in slot 2 of the ADAM-5000/TCP system at address 01h to return the last output value it received from an Analog Data Out command, or its start-up output current /voltage.

The analog output module returns the value 3.000 mA (this assumes that the module was configured for the range 0-20 mA).

6-4-5 Digital Input/Output Command Set

Command Syntax	Command Name	Description
$aaSi6	Digital Data In	"Returns the values of digital I/O channels for a specified module"
#aaSiBB(data)	Digital Data Out	"Sets output values of a single digital output channel or of all digital output channels simultaneously for a specified module."
$aaSiM	"Read Channel Masking Status"	"Asks the specified module to return the masking status of all digital output channels."

$aaSi6

Name Digital Data In

Description This command requests that the specified module in an ADAM-5000/TCP system at address aa return the status of its digital input channels and a read-back value of its digital output channels.

Syntax **$aaSi6(cr)**

$ is a delimiter character.

aa (range 00-FF) represents the 2-character hexadecimal Modbus network address of the ADAM-5000/TCP system.

Si identifies the I/O slot of the system you want to read.

6 is the Digital Data In command.

(cr) is the terminating character, carriage return (0Dh)

Response **!aa(datainput)(datainput)00(cr)** if the command is valid. (ADAM-5051/5050/5055)

!aa(dataoutput)(dataoutput)00(cr) if the command is valid. (ADAM-5050/5055/5056)

!aa(dataoutput)0000(cr) if the command is valid. (ADAM-5060, ADAM-5068, ADAM-5069)

?aa(cr) if an invalid operation was entered. There is no response if the module detects a syntax error or communication error or if the specified ad- dress does not exist.

! delimiter character indicating a valid command was received.

? delimiter character indicating the command was invalid.

aa (range 00-FF) represents the 2-character hexadecimal Modbus network address of an ADAM-5000/TCP system.

(datainput) a 2-character hexadecimal value representing the input values of the digital input module.

(dataoutput) a 2-character hexadecimal value which is the read-back of a digital output channel or relay.

(cr) is the terminating character, carriage return (0Dh)

Example

command: **$01S26(cr)**

response: **!01112200(cr)** The command asks the digital input module in slot 2 of the ADAM-5000/TCP system at address 01h to return the values of all of its channels.

The first 2-character portion of the response indicates the address of the ADAM-5000/TCP system. The second 2-character portion of the response, value 11h (00010001), indicates that digital input channels 8 and 12 are ON, channels 9, 10, 11, 13, 14 and 15 are OFF. The third 2-character portion of the response, value 22h (00100010), indicates that digital input channels 1 and 5 are ON, and channels 0, 2, 3, 4, 6 and 7 are OFF.

#aaSiBB(data)

Name Digital Data Out

Description This command either sets a single digital output chan- nel or sets all digital output channels simultaneously.

Syntax **#aaSiBB(data)(cr)**

is a delimiter character.

aa (range 00-FF) represents the 2-character hexadecimal Modbus network address of the ADAM-5000/TCP system.

Si identifies the slot i (i:0 to 7) of the ADAM-5000/TCP system which contains the module whose output values you want to set. **BB** is used to indicate which channel(s) either single or all will be set. Writing to all channels (write a byte): both characters should be equal to zero (BB=00). Writing to a single channel (write a bit): first charac- ter is 1, second character indicates channel number which can range from 0h to Fh. The ADAM-5055 can range from 0h to 7h, the ADAM-5056 can range from 0h to Fh, and the ADAM-5060/5068/5069 can range from 0h to 7h).

(data) is the hexadecimal representation of the digital output value(s). **When writing to a single channel** (bit) the first char- acter is always 0. The value of the second character is either 0 or 1.

When writing to all channels (byte) 2 or 4-characters are significant. The digital equivalent of these hexadecimal characters represent the channels' values.

Note that the number of channels on the ADAM-5056 and ADAM-5060/5068/5069 differ.

A 4-character hexadecimal value is used to set the channels, from 15 thru 0, of the ADAM-5056. A 2 character hexadecimal value is used to set the channels, from 5 thru 0, of the ADAM-5060. Bits 6 and 7 always default to 0 in the ADAM-5060. A 2-character hexadecimal value is used to set the channels, from 7 thru 0, of the ADAM-5055/5068/5069.

Response

>(cr) if the command was valid.

?aa(cr) if an invalid command has been issued.

There is no response if the module detects a syntax error or communication error or if the specified address does not exist.

> delimiter character indicating a valid command was received.

? delimiter character indicating the command was invalid.

aa (range 00-FF) represents the 2-character hexadecimal Modbus network address of an ADAM-5000/TCP system that is responding.

(cr) is the terminating character, carriage return (0Dh)

Example

command: **#15S11201(cr)**

response: **>(cr)** An output bit with value 1 is sent to channel 2 of a digital output module in slot 1 of the ADAM-5000/ TCP system at address 15h - either ADAM-5056 or ADAM-5050/5055/5060/5068/5069. Channel 2 of the digi- tal output module is set to ON.

command: **#01S1001234(cr)**

response: **>(cr)** An output byte with value 1234h (0001001000110100) is sent to the digital output module (ADAM-5056) in slot 1 of the ADAM-5000/TCP system at address

01h. Channels 2, 4, 5, 9 and 12 will be set to ON, and all other channels are set to OFF.

command: **#01S0003A(cr)**

response: **>(cr)**

An output byte with value 3Ah (00111011) is sent to the digital output module (ADAM-5060) in slot 0 of the ADAM-5000/TCP system at address 01h. Channels 0, 1, 3, 4 and 5 will be set to ON while channel 2 is set to OFF.

Bits 6 and 7 are not used and always default to 0.

Note: If any channel of the digital output module is configured as the output for an analog input alarm, it cannot be reconfigured via digital output commands. Channels used for analog input alarms always have a higher priority.

Read Channel Masking Status of ADAM-5050/5051/5052/5056/5060/5068/5069 Command Set

$aaSiM

Name Read Channel Masking Status

Description Asks the specified module to return the masking status of digital output channels

Syntax **$aaSiM(cr)**

$ is a delimiter character.

aa (range 00-FF) represents the 2-character hexadecimal address of the ADAM-5000/TCP system.

Si identifies the I/O slot of the system you want to read.

M is Channel Masking Status command.

(cr) is the terminating character, carriage return (0Dh)

Response **!aa(data)(cr)** if the command is valid.

?aa(cr) if an invalid operation was entered. There is no response if the module detects a syntax error or communication error or if the specified ad- dress does not exist.

! delimiter character indicating a valid command was received.

? delimiter character indicating the command was invalid.

aa (range 00-FF) represents the 2-character hexadecimal address of an ADAM-5000/TCP system that is responding.

(data) is the hexadecimal value representing the status of all digital output channels. A 4-character value represents the output channels in sequence from 15 thru 0 in an ADAM-5056 module. A 2-character value represents the output channels in sequence from 5 thru 0 in an ADAM-5060 module. And a 2-character value represents the output channels in sequence from 7 thru 0 in ADAM-5068/5069 module. Each bit represents a channel. A value of 1 means the channel is masked, while a value of 0 means the channel is valid.

(cr) is the terminating character, carriage return (0Dh)

Example

command: **$01S1M(cr)**

response: **!011322(cr)**

The command asks the digital output module in slot 1 of the ADAM-5000/TCP system at address 01h to return the masking status of all of its channels.

The first 2-character portion of the response indicates the address of the ADAM-5000/TCP system. The second 2-characters portion of the response, value 13h (00010011), indicates that digital output channels 8, 9 and 12 are

masked, while channels 10, 11, 13, 14 and 15 are valid. The third 2-character portion of the response, value 22h (00100010), indicates that digital output channels 1 and 5 are masked, while channels 0, 2, 3, 4, 6 and 7 are valid.

ADAM-5080 Counter/Frequency Command Set

Command Syntax	Command Name	Description
$aaT	Read Module Name	Returns the module name from a specified ADAM-5000 system.
$aaF	Read Firmware Version	Returns the firmware version code from a specified ADAM-5000 system.
$aaSiArrff	Set Configuration	Set slot index and counter mode
$aaSiB	Read Configuration	The command requests the Configuration of slot
#aaSi	Read All Channel Counter (Frequency) Data	Returns the input value of all channels for the specified input module for a specified system in engineering unit only.
#aaSiCj	Read One Channel Counter (Frequency) Data	The command will return the input value from one of the four channels of a specified module.
$aaSiØ(data)	Set Digital filter Scale	Set the filter seconds to start to measure the input signal.
$aaSiØ	Read Digital filter scale	Read the filter seconds to start to measure the input signal.
$aaSiCj5s	Set Counter Start/Stop	Request the addressed counter/frequency module to start or stop the counting.

Command Syntax	Command Name	Description
$aaSiCj6	Clear Counter	Clear the counters of the specified counter/frequency module
$aaSi7	Read Overflow Flag	The command requests the addressed module to return the status of the overflow flag of counter.
@aaSiCjP(data)	Set Initial Counter Value	Set initial counter value for counter of the specified counter module.
@aaSiCjG	Read Counter Initial Value	Read initial of the specified counter module.
$aaSiCjAhEs	Set Alarm Disable/Latch	The addressed counter module is instructed to set alarm disable or latch.
$aaSiCjAh	Read Alarm Disable/Latch	Returns the alarm mode for the specified channel.
$aaSiCjCh	Clear Alarm Status	Returns the alarm status to normal
$aaSiCjAhCSkCn	Set Alarm Connection	Connects the High/Low alarm of the specified input channel to the specified digital output in the addressed ADAM-5000 system
$aaSiCjRhC	Read Alarm Connection	Returns the High/Low alarm limit output connection of a specified input channel in the addressed ADAM-5000 system
$aaSiCjAhU (data)	Set Alarm Limit	Sets the High/Low alarm limit value for the specified input channel of a specified ADAM-5000 system.
$aaSiCjRhU	Read Alarm Limit	Returns the High/Low alarm limit value for the specified input channel in the addressed ADAM-5000 system
$aaSiCjS	Read Alarm Status	Reads whether an alarm occurred for the specified input channel in the specified ADAM-5000 system

Table 6-10: Counter/Frequency Command Set Table

$aaT

Name Read Module Name

Description Returns the module name from a specified ADAM-5000/TCP system.

Syntax **$aaT (cr)**

$ is a delimiter character.

aa (range 00-FF) represents the 2-character hexadecimal Modbus network address of the ADAM-5000/TCP system you want to interrogate.

T is the command for reading Module Name.

(cr) is the terminating character, carriage return (0Dh).

Response **!aaFFFFFFFF(cr)** if the command is valid.

?aa(cr) if an invalid operation was entered.

There is no response if the module detects a syntax error, communication error or if the specified address does not exist.

! delimiter character indicating a valid command was received.

? delimiter character indicating the command was invalid.

aa (range 00-FF) represents the 2-character hexadecimal Modbus network address of an ADAM-5000/TCP system.

FFFFFFFF indicates the I/O slot which ADAM-5080 module is in.

(cr) is the terminating character, carriage return (0Dh).

Example command: $01T(cr)

Response: !01FF80FFFF(cr)

ADAM-5080 is plugged in slot 1 and the command requests the system at address 01h to send its module name.

$aaF

Name Read Firmware Version

Description Returns the firmware version code from a specified ADAM-5000/TCP system.

Syntax **$aaF(cr)**

$ is a delimiter character.

aa (range 00-FF) represents the 2-character hexadecimal address of the ADAM-5000/TCP system you want to interrogate.

F is the command for reading Firmware Version.

(cr) is the terminating character, carriage return (0Dh).

Response **!aa(version)(cr)** if the command is valid.

?aa(cr) if an invalid operation was entered.

There is no response if the module detects a syntax error, communication error or if the specified address does not exist.

! delimiter character indicating a valid command was received.

? delimiter character indicating the command was invalid.

aa (range 00-FF) represents the 2-character hexadecimal Modbus network address of an ADAM-5000/TCP system.

(version) represents the firmware version of the ADAM-5000/TCP system.

(cr) is the terminating character, carriage return (0Dh).

Eample command: **$01F(cr)**

response: **!01A1.1(cr)**

The command requsets the system at address 01h to send its firmware version.

The system responds with firmware version A1.1.

$aaSiArrff

Name	Set Configuration
Description	Set slot index and counter mode.
Syntax	**$aaSiArrff(cr)**
	$ is a delimiter character.
	aa (range 00-FF) represents the 2-character hexadecimal address of the ADAM-5000/TCP system you want to configure.
	Si identifies the I/O slot i you want to configure.
	A is command for setting I/O module configuration.
	rr indicates which mode is.
	rr=00 represents Bi-direction counter mode.
	rr=01 represenrs UP/DOWN counter mode.
	rr=02 represents Frequency mode.
	ff indicates which format is
	ff=00 represents the engineer format.
	ff=02 represents the hexadecimal format.
Response	**!aa(cr)** if the command is valid.
	?aa(cr) if an invalid operation was entered.
	There is no response if the module detects a syntax error or communication error or if the specified address does not exists.
	! delimiter character indicating a valid command was received.
	? delimiter character indicating the command was invalid.
	aa (range 00-FF) represents the 2-character hexadecimal address of an ADAM-5000/TCP system.
	(cr) is the terminating character, carriage return (0Dh)
Example	command: **$01S1A0002(cr)**
	response: **!01(cr)**
	The ADAM-5080 in Slot 1 of ADAM-5000 system at address 01h is in Bi-direction mode and configured for hexadecimal format.

$aaSiB

Name Read Configuration.

Description The command requests the Configuration of slot

Syntax **$aaSiB(cr)**

$ is a delimiter character.

aa (range 00-FF) represents the 2-character hexadecimal address of the ADAM-5000/TCP system you want to interrogate.

Si identifies the desired slot i

B represents the configuration status command

(cr) is the terminating character, carriage return (0Dh).

Response **!aarrff(cr)** if the command is valid.

?aa(cr) if an invalid operation was entered.

There is no response if the module detects a syntax error or communication error or if the specified address does not exist.

! delimiter character indicating a valid command is received.

? delimiter character indicating the command is invalid.

aa (range 00-FF) represents the 2-character hexadecimal address of an ADAM-5000/TCP system.

rr=00 represents Bi-direction counter mode.

rr=01 represenrs UP/DOWN counter mode.

rr=02 represents Frequency mode.

ff indicates which format is

ff=00 represents the engineer format.

ff=02 represents the hexdecimal format.

(cr) is the terminating character, carriage return (0Dh).

Example command: **$01S3B(cr)**

response: **!010100(cr)**

The ADAM-5080 in Slot 3 of ADAM-5000/TPC system at address 01h responds that it is configured in UP/DOWN counter mode and for engineering unit data format.

#aaSi

Name Read All Channel Counter (Frequency) Data

Description Return the input value of all channels for the specified input module for a specified system in engineering unit only.

Syntax **#aaSi(cr)**

is a delimiter character.

aa (range 00-FF) represents the 2-character hexadecimal Modbus network address of the ADAM-5000/TCP system you want to interrogate.

Si is the I/O slot of ADAM-5000 system you want to read.

(cr) is the terminating character, carriage return (0Dh)

Response **>(data) (data) (data) (data) (cr)** if the command is valid.

?aa (cr) if an invalid operation was entered.

There is no response if the module detects a syntax error or communication error or if the specified address does not exists.

> is a delimiter character.

? is a delimiter character indicating the command being invalid.

(data) is the input value in engineering units of the interrogated module of the specified system. If the numbers of (data) are ten ,counter/frequency mode is in decimal format. If the numbers of (data) are eight, counter/frequency mode is in hexadecimal format. If (data) = " ", it means the channel is invalid.

(cr) is the terminating character, carriage return (0Dh).

Example

command: **#01S2(cr)**

response:

If the response you got is in Counter mode, you'll see one similar to the example below:

>1235458013267521306934521463051832106549(cr)

What you see here is actually the input values of all channels that is returned from slot 2 of the ADAM-5000/TCP system at address 01h.

As all 4 values are concatenated into one numerical string such as above, we can still easily discern the values of 4 channels specifically as:

1235458013, 2675213069, 3452146305 and 1832106549

If the response is

>0e88fa63c33697b52a68d61fe2ca6915(cr)

The command requests the module in slot 2 of the ADAM-5000/TCP system at address 01h to return the input values of all channels.

The module response that input values if all channels are hexadecimal:

0e88fa63,c33697b5,2a68d61f,e2ca6915

However, if the response is in frequency mode, you'll see one similar to the example below:

>0000098700000006490000000762000000011600(cr)

As all 4 values are concatenated into one numerical string such as above, we can still easily discern the values of 4 channels specifically as:

0000098700,0000064900,0000076200,0000011600

What you see here is actually the input values of all channels returned from slot 2 of the ADAM-5000/TCP system at address 01h and in decimal format. However, it is not the actual frequency.

Each actual frequency can be obtained by dividing the response value by 100. Therefore, taking an example of the value above, the actual frequency should be:

actual frequency = 98700/100 = 987

If the response is:

>0000F100000020000000031000000DD400(cr)

The command requests the module in slot 2 of the ADAM-5000/TCP system at address 01h to return the input values of all channels.

The module response that input values if all channels are hexadecimal:

0000F100,00020000,00031000,000DD400

The actual frequency can be obtained by transferring hexadecimal format to decimal format. Then divide the response value by 100. Therefore, taking an example of the value above, the actual frequency should be:

F100 (hexdecimal)=24100 (decimal)

actual frequency = 24100/100 = 241

#aaSiCj

Name Read One Channel Counter (Frequency) Data

Description The command will return the input value from one of the four channels of a specified module.

Syntax **#aaSiCj(cr)**

is a delimiter character.

aa (range 00-FF) represents the 2-character hexadecimal Modbus address of the ADAM-5000/TCP system you want to interrogate.

Si identifies the I/O slot you want to interrogate.

Cj identifies the channel you want to read.

(cr) is the terminating character, carriage return (0Dh)

Response **>(data)** if the command is valid.

?aa(cr) if an invalid operation was entered.

There is no response if the module detects a syntax error or communication error or if the specified address does not exists.

> is a delimiter character.

? delimiter character indicating the command was invalid.

(data) is the input value in engineering units of the interrogated module of the specified system. If the numbers of (data) are ten ,counter/frequency mode is in decimal format. If the numbers of (data) are eight, counter/frequency mode is in hexadecimal format. If (data) = " ", it means the channel is invalid.

(cr) is the terminating character, carriage return (0Dh)

Example

command: *$01S3C2(cr)*

response: **>0000000451(cr)**

The command requests the ADAM-5080 module in slot 3 of the ADAM-5000/TCP system at address 01h to return the input value of channel 2.

The counter module responds that the input value of channel 2 is 451.

$aaSi0(data)

Name Set Digital filter Scale

Description Set the filter seconds to start to measure the input signal.

Syntax **$aaSi0(data)(cr)**

$ is a delimiter character.

aa (range 00-FF) represents the 2-character hexadecimal address of the ADAM-5000/TCP system which is to be calibrate.

Si identifies the specified slot.

0 is the command for setting digital filter scale.

(data) represents filter seconds from 8μs~65000 μs. Be aware that (data) has 5 characters.

(cr) is the terminating character, carriage return (0Dh)

Response **!aa(cr)** if the command is valid.

?aa(cr) if an invalid operation was entered.

There is no response if the module detects a syntax error or communication error or if the specified address does not exists.

! delimiter character indicating a valid command was received.

? delimiter character indicating the command was invalid.

aa (range 00-FF) represents the 2-character hexadecimal address of an ADAM-5000/TCP system.

(cr) is the terminating character, carriage return (0Dh)

Example command: **$01S3000765(cr)**

response: **!01(cr)**

The ADAM-5080 in slot 3 of the ADAM-5000/TCP system at address 01h needs 765m seconds to start to measure the input.

$aaSi0

Name Read Digital filter scale

Description Read the filter seconds to start to measure the input signal.

Syntax **$aaSi0(cr)**

$ is a delimiter character.

aa (range 00-FF) represents the 2-character hexadecimal address of the ADAM-5000/TCP system which is to be calibrate.

Si identifies the I/O slot which is to be accessed.

0 is the command for reading digital filter scale.

(cr) is the terminating character, carriage return (0Dh)

Response **!aa(data)(cr)** if the command is valid.

?aa(cr) if an invalid operation was entered.

There is no response if the module detects a syntax error or communication error or if the specified address does not exists.

! delimiter character indicating a valid command was received.

? delimiter character indicating the command was invalid.

aa (range 00-FF) represents the 2-character hexadecimal address of an ADAM-5000/TCP system.

(data) represents filter seconds from 8 μs~65000 μs. Be aware that (data) has 5 characters.

(cr) is the terminating character, carriage return (0Dh)

Example command: **$01S30(cr)**

response: **!0100765(cr)**

The command requests the ADAM-5080 in slot 3 of the ADAM-5000/TCP system at address 01h to read the filter seconds. The module responds with 765m seconds.

$aaSiCj5s

Name Set Counter Start/Stop

Description Request the addressed counter/frequency module to start or stop the counting.

Syntax **$aaSiCj5s(cr)**

$ is a delimiter character.

aa (range 00-FF) represents the 2-character hexadecimal Modbus network address of the ADAM-5000/TCP system.

SiCj identifies the I/O slot i and the channel j of the module you want to set.

5 is the command for setting counter Start/Stop.

s represents start/stop command.

s=0 indicate stop counter.

s=1 indicate start counter.

(cr) is the terminating character, carriage return (0Dh)

Response **!aa(cr)** if the command is valid.

?aa(cr) if an invalid operation was entered.

There is no response if the module detects a syntax error or communication error or if the specified address does not exists.

! delimiter character indicating a valid command was received.

? delimiter character indicating the command was invalid.

aa (range 00-FF) represents the 2-character hexadecimal Modbus network address of an ADAM-5000/TCP system.

(cr) is the terminating character, carriage return (0Dh)

Example

command: **$01S3C251(cr)**

response: **!01(cr)**

The command requests channel 2 of ADAM-5080 in slot 3 in ADAM-5000/TCP system at address 01h to start counter.

$aaSiCj5

Name Read counter Start/Stop

Description Requests the addressed counter/frequency module to indicate whether counters are active.

Syntax **$aaSiCj5(cr)**

$ is a delimiter character.

aa (range 00-FF) represents the 2-character hexadecimal Modbus network address of the ADAM-5000/TCP system.

SiCj identifies the I/O slot i and the channel j of the module you want to set.

5 is the command for reading counter Start/Stop.

(cr) is the terminating character, carriage return (0Dh)

Response **!aas (cr)** if the command is valid.

?aa (cr) if an invalid operation was entered.

There is no response if the module detects a syntax error or communication error or if the specified address does not exists.

! delimiter character indicating a valid command was received.

? delimiter character indicating the command was invalid.

aa (range 00-FF) represents the 2-character hexadecimal Modbus network address of an ADAM-5000/TCP system.

s represents start/stop command.

s=0 indicate stop counter.

s=1 indicate start counter.

(cr) is the terminating character, carriage return (0Dh)

Example

command: **$01S3C25(cr)**

response: **!011(cr)**

The channel 2 of ADAM-5080 in slot 3 in ADAM-5000/TCP system at address 01h is instructed to return its counter status. The counter status is in start status.

$aaSiCj6

Name Clear Counter

Description Clear the counters of the specified counter/frequency module

Syntax **$aaSiCj6(cr)**

$ is a delimiter character.

aa (range 00-FF) represents the 2-character hexadecimal Modbus network address of the ADAM-5000/TCP system.

SiCj identifies the I/O slot i and the channel j for the module you want to return a prior value.

6 is the command for clearing counter.

(cr) is the terminating character, carriage return (0Dh)

Response **!aa(cr)** if the command is valid.

?aa(cr) if an invalid operation was entered.

There is no response if the module detects a syntax error or communication error or if the specified address does not exist.

! delimiter character indicating a valid command was received.

? delimiter character indicating the command was invalid.

aa (range 00-FF) represents the 2-character hexadecimal Modbus network address of an ADAM-5000/TCP system.

(cr) is the terminating character, carriage return (0Dh)

Example

command: **$01S3C26(cr)**

response: **!01(cr)**

The command requests the channel 2 of ADAM-5080 in slot 3 in ADAM-5000/TCP system at address 01h to clear counter value.

$aaSi7

Name Read Overflow Flag

Description The command requests the addressed module to return the status of the overflow flag of counter.

Syntax **$aaSi7(cr)**

$ is a delimiter character.

aa (range 00-FF) represents the 2-character hexadecimal Modbus network address of the ADAM-5000/TCP system.

Si identifies the I/O slot i (i : 0 to 7).

7 is the command for the last value read-back.

Response **!aaff ff ff ff(cr)** if the command is valid.

?aa(cr) if an invalid operation was entered.

There is no response if the module detects a syntax error or communication error or if the specified address does not exist.

! delimiter character indicating a valid command was received.

? delimiter character indicating the command was invalid.

aa (range 00-FF) represents the 2-character hexadecimal Modbus network address of an ADAM-5000/TCP system.

ffffffff is the number of overflow for a specified channel.

(ffffffff represents 0~3 channels, each of which is represented by one **ff)**.

(cr) is the terminating character, carriage return (0Dh)

Note: When this command is issued, the overflow value is cleared and starts afresh.

Example

command: **$01S37(cr)**

response: **!0100000001(cr)**

The command requests the ADAM-5080 of slot 3 in ADAM-5000/TCP system at address 01h to return the overflow value. The overflow value in channel 3 is 01.

The others are 00.

@aaSiCjP(data)

Name Set Initial Counter Value

Description Set initial counter value for counter of the specified counter module.

Syntax **@aaSiCjP(data)(cr)**

@ is a delimiter character.

aa (range 00-FF) represents the 2-character hexadecimal address of the ADAM-5000/TCP system.

SiCj identifies the I/O slot i and the channel j for the module you want to return a prior value.

P represents Set Initial Counter Value command.

(data) is initial value from 0 to 4294967296. Be aware that (data) has 10 characters.

(cr) is the terminating character, carriage return (0Dh)

Response **!aa(cr)** if the command is valid.

?aa(cr) if an invalid operation was entered.

There is no response if the module detects a syntax error or communication error or if the specified address does not exist.

! delimiter character indicating a valid command was received.

? delimiter character indicating the command was invalid.

aa (range 00-FF) represents the 2-character hexadecimal address of an ADAM-5000/TCP system.

(cr) is the terminating character, carriage return (0Dh)

Example command: **@01S3C2P0000004369(cr)**

response: **!01(cr)**

The channel 2 of ADAM-5080 in slot 3 in ADAM-5000/TCP system at address 01h is instructed to set initial counter value. The initial counter value is 4369.

@aaSiCjG

Name	Read Initial Counter
Description	Read initial counter value of specified module.
Syntax	**@aaSiCjG(cr)**
	@ is a delimiter character.
	aa (range 00-FF) represents the 2-character hexadecimal address of the ADAM-5000/TCP system.
	SiCj identifies the I/O slot i and the channel j for the module you want to return a prior value.
	G is the last value readback command.
	(cr) is the terminating character, carriage return (0Dh)
Response	**!aa(data)(cr)** if the command is valid.
	?aa(cr) if an invalid operation was entered.
	There is no response if the module detects a syntax error or communication error or if the specified address does not exist.
	! delimiter character indicating a valid command was received.
	? delimiter character indicating the command was invalid.
	aa (range 00-FF) represents the 2-character hexadecimal address of an ADAM-5000/TCP system.
	(data) is initial value from 0 to 4294967295.Be aware that (data) has 10 characters.
	(cr) is the terminating character, carriage return (0Dh)
Example	command: **@01S3C2G(cr)**
	response: **!010000004369(cr)**
	The channel 2 of ADAM-5080 in slot 3 in ADAM-5000/TCP system at address 01h is instructed to return counter initial value. The initial counter value is 4369.

}

$aaSiCjAhEs

Name Set Alarm Disable/Latch

Description The addressed counter module is instructed to set alarm disable or latch.

Syntax **$aaSiCjAhEs(cr)**

$ is a delimiter character.

aa (range 00-FF) represents the 2-character hexadecimal Modbus network address of an ADAM-5000/TCP system.

SiCj identifies the desired slot i and the desired channel j.

AhEs is the command for setting Alarm Disable/Latch Mode command.

h indicates alarm type and can have the value H = High alarm, L = Low alarm

s indicates alarm enable/disable and can have the value D = Disable, E=Enable

(cr) represents terminating character, carriage return (0Dh)

Response **!aa(cr)** if the command was valid

There is no response if the system detects a syntax error or communication error or if the specified address does not exist.

! delimiter character indicating a valid command was received.

aa represents the 2-character hexadecimal Modbus network address of the corresponding ADAM-5000/TCP system.

(cr) represents terminating character, carriage return (0Dh)

Example

command: **$01S0C1ALED(cr)**

response: **!01(cr)**

Channel 1 of slot 0 of ADAM-5080 in ADAM-5000/TCP system at address 01h is instructed to disable its Low alarm function.

The module confirms that its Low alarm function has been disabled.

$aaSiCjAh

Name Read Alarm Disable/Latch

Description Return the alarm mode for the specified channel.

Syntax **$aaSiCjAh(cr)**

$ is a delimiter character.

aa (range 00-FF) represents the 2-character hexadecimal Modbus network address of an ADAM-5000/TCP system.

SiCj identifies the desired slot i and the desired channel j.

A is the Read Alarm Mode command.

h indicates alarm type and can have the value H = High alarm, L = Low alarm

(cr) represents terminating character, carriage return (0Dh)

Response **!aap(cr)** if the command was valid

There is no response if the system detects a syntax error or communication error or if the specified address does not exist.

! delimiter character indicating a valid command was received.

aa represents the 2-character hexadecimal Modbus address of the corresponding ADAM-5000/TCP system.

p indicates alarm mode.

p=D, if alarm is Disable.

P=L, if alarm is Latch.

(cr) represents terminating character, carriage return (0Dh)

Example

command: **$01S0C1AL(cr)**

response: **!01L(cr)**

Channel 1 of slot 0 of ADAM-5080 in ADAM-5000/TCP system at address 01h is instructed to return its Low alarm mode. The system responds that it is latched.

$aaSiCjCh

Name Clear Alarm Status

Description Returns the alarm status to normal

Syntax **$aaSiCjCh(cr)**

$ is a delimiter character.

aa (range 00-FF) represents the 2-character hexadecimal Modbus network address of an ADAM-5000/TCP system.

SiCj identifies the desired slot i and the desired channel j.

C is the clear Alarm Mode command.

h indicates alarm type and can have the value H = High alarm, L = Low alarm

(cr) represents terminating character, carriage return (0Dh)

Response **!aa(cr)** if the command was valid

There is no response if the system detects a syntax error or communication error or if the specified address does not exist.

! delimiter character indicating a valid command was received.

aa represents the 2-character hexadecimal Modbus network address of the corresponding ADAM-5000/TCP system.

(cr) represents terminating character, carriage return (0Dh)

Example

command: **$01S0C1CL(cr)**

response: **!01(cr)**

Channel 1 of slot 0 of ADAM-5080 in ADAM-5000 system at address 01h is instructed to set its Low alarm state to normal.

The system confirms it has done so accordingly.

$aaSiCjAhCSkCn

Name Set Alarm Connection

Description Connect the High/Low alarm of the specified input channel to the specified digital output in the addressed ADAM-5000/TCP system

Syntax **$aaSiCjAhCSkCn(cr)**

$ is a delimiter character.

aa (range 00-FF) represents the 2-character hexadecimal Modbus network address of an ADAM-5000/TCP system.

SiCj identifies the desired slot i and the desired channel j .

AhC is the command for setting Alarm Connection command.

h indicates alarm type and can have the value H = High alarm, L = Low alarm

SkCn identifies the desired slot k and the desired digital output point n (n : 0 to F). To disconnect the digital output, k and n should be set as '*'.

(cr) represents terminating character, carriage return (0Dh)

Response **!aa(cr)** if the command was valid

There is no response if the system detects a syntax error or communication error or if the specified address does not exist.

! delimiter character indicating a valid command was received.

aa represents the 2-character hexadecimal Modbus network address of the corresponding ADAM-5000/TCP system.

(cr) represents terminating character, carriage return (0Dh)

Example

command: **$01S0C1ALCS1C0(cr)**

response: **!01(cr)**

Channel 1 of slot 0 of ADAM-5080 in ADAM-5000/TCP system at address 01h is instructed to connect its Low alarm to the digital output of point 0 of slot 1 in the same

ADAM-5000/TCP system.

The system confirms it has dome so accordingly.

$aaSiCjRhC

Name Read Alarm Connection

Description Return the High/Low alarm limit output connection of a specified input channel in the addressed ADAM-5000/TCP system

Syntax **$aaSiCjRhC(cr)**

$ is a delimiter character.

aa (range 00-FF) represents the 2-character hexadecimal Modbus network address of an ADAM-5000/TCP system.

SiCj identifies the desired slot i and the desired channel j.

RhC is the command for reading Alarm Connection.

h indicates alarm type and can have the value H = High alarm, L = Low alarm

(cr) represents terminating character, carriage return (0Dh)

Response **!aaSkCn(cr)** if the command was valid

There is no response if the system detects a syntax error or communication error or if the specified address does not exist.

! delimiter character indicating a valid command was received.

aa represents the 2-character hexadecimal Modbus network address of the corresponding ADAM-5000/TCP system.

SkCn identifies the desired slot k and the desired digital output point n (n : 0 to F) to which the input alarm is connected. If the values of k and n are '*', the analog input has no connection with a digital output point.

(cr) represents terminating character, carriage return (0Dh)

Example

command: **$01S0C1RLC(cr)**

response: **!01SØC1(cr)**

Channel 1 of slot 0 of ADAM-5080 in ADAM-5000/TCP system at address 01h is instructed to read its Low alarm output connection.

The system responds that the Low alarm output connects to the digital output at point 0 of slot 1 in the same ADAM-5000/TCP system.

$aaSiCjAhU(data)

Name Set Alarm Limit

Description Set the High/Low alarm limit value for the specified input channel of a specified ADAM-5000/TCP system.

Syntax **$aaSiCjAhU(data)(cr)**

$ is a delimiter character.

aa (range 00-FF) represents the 2-character hexadecimal Modbus network address of an ADAM-5000/TCP system.

SiCj identifies the desired slot i and the desired channel j.

AhU is the Set Alarm Limit command.

h indicates alarm type and can have the value H = High alarm, L = Low alarm

(data) represents the desired alarm limit setting. The value is from 0 to 4294967295. Be aware that (data) has 10 characters.

(cr) represents terminating character, carriage return (0Dh)

Response **!aa(cr)** if the command was valid

There is no response if the system detects a syntax error or communication error or if the specified address does not exist.

! delimiter character indicating a valid command was received.

aa represents the 2-character hexadecimal Modbus network address of the corresponding ADAM-5000/TCP system.

(cr) represents terminating character, carriage return (0Dh)

Example

command: **$01SØC1AHU0000000020(cr)**

response: **!01(cr)**

The channel 1 of slot 0 of ADAM-5080 in ADAM-5000/TCP system at address 01h is configured to set High alarm limit value to 20.

$aaSiCjRhU

Name Read Alarm Limit

Description Return the High/Low alarm limit value for the specified input channel in the addressed ADAM-5000/TCP system

Syntax **$aaSiCjRhU(cr)**

$ is a delimiter character.

aa (range 00-FF) represents the 2-character hexadecimal Modbus network address of an ADAM-5000/TCP system.

SiCj identifies the desired slot i and the desired channel j.

RhU is the Read Alarm Limit command.

h indicates alarm type and can have the value H = High alarm, L = Low alarm

(cr) represents terminating character, carriage return (0Dh)

Response **!aa(data)(cr)** if the command was valid

There is no response if the system detects a syntax error or communication error or if the specified address does not exist.

! delimiter character indicating a valid command was received.

aa represents the 2-character hexadecimal Modbus network address of the corresponding ADAM-5000/TCP system.

(data) represents the desired alarm limit setting. The format is always in engineering units. Be aware that (data) has 10 characters.

(cr) represents terminating character, carriage return (0Dh)

Example

command: **$01SØC1RHU(cr)**

response: **!010000000026(cr)**

The channel 1 of slot 0 of ADAM-5080 in the ADAM-5000/TCP system at address 01h is configured to return the High alarm limit value. The High alarm limit value is 26.

$aaSiCjS

Name Read Alarm Status

Description Read whether an alarm occurred for the specified input channel in the specified ADAM-5000/TCP system

Syntax **$aaSiCjS(cr)**

$ is a delimiter character.

aa (range 00-FF) represents the 2-character hexadecimal Modbus network address of an ADAM-5000/TCP system.

SiCj identifies the desired slot i and the desired channel j.

S is the Read Alarm Status command.

(cr) represents terminating character, carriage return (0Dh)

Response **!aahl(cr)** if the command was valid

There is no response if the system detects a syntax error or communication error or if the specified address does not exist.

! delimiter character indicating a valid command was received.

aa represents the 2-character hexadecimal Modbus network address of the corresponding ADAM-5000/TCP system.

h represents the status of High alarm. '1' means the High alarm occurred, '0' means it did not occur.

l represents the status of Low alarm. '1' means the Low alarm occurred, '0' means it did not occur.

(cr) represents terminating character, carriage return (0Dh)

Example

command: **$01SØC1S**

response: **!0111(cr)**

The channel 1 of slot 0 of ADAM-5080 in the ADAM-5000/TCP system at address 01h is configured to read alarm status.

The High alarm has occurred and low alarm has oc-

Appendix A
Design Worksheets

An organized system configuration will lead to efficient performance and reduce engineer effort. This Appendix provides the necessary worksheet, helping users to configure their DA&C system in order. Follow these working steps to build up your system relational document:

Step 1: Asking questions and getting answers for your control strategy.

1) What will be monitored and controlled? (List the equipment)
2) What will be monitored and controlled separately? (Divide the function area)
3) What will be monitored and controlled by ADAM-5000/TCP? (List the target equipment in different function areas)

Step 2: Identify the I/O types of each equipment and full-fill Table A-1 to establish the I/O data base.

Function Area	Equipment	Input or Output	I/O Module Type	I/O Module Product No.	Voltage of Range	Current of Range	Special Requirements

Table A-1: I/O Data Base

Step 3: Mapping the I/O data base into ADAM-5000/TCP system.

1) In column A, note the ADAM-5000/TCP IP addresses mapped for individual function areas.
2) In column B, list the I/O module's product number.
3) In column C, enter the maximum number of I/O points available per module.
4) In column D, total the number of the I/O point you need.
5) In column E, calculate the total number of these modules that you will need for these ADAM-5000/TCP systems.
6) In column F, enter the number of spare modules that you may need for future expansion in these ADAM-5000/TCP systems.
7) In column G, enter the total number (Required + Spare) of these modules that you need for these ADAM-5000/TCP systems.

<A>	<B>	<C>	<D>	<E>	<F>	<G>
ADAM-5000/TCP IP Address	I/O Module Product No.	I/O Points per Module	Total I/O Points Required	I/O Module Required	Spare I/O Modules	Total I/O Modules

Table A-2: Summary Required Modules

Step 4: Implement the Modbus address in to the I/O table.

ADAM-5000/TCP IP Address	I/O Module Slot No.	I/O Type	Channel Number	I/O Address	Tag Name	Equipment & Description

Table A-3: Table for Programming

These several worksheets are very useful to hardware wiring and software integration, please make copies to establish your own system configuration documentation.

Appendix B
Data Formats and I/O Ranges

B.1 Analog Input Formats

The ADAM analog input modules can be configured to transmit data to the host in Engineering Units.

Engineering Units

Data can be represented in Engineering Units by setting bits 0 and 1 of the data format/checksum/integration time parameter to 0.

This format presents data in natural units, such as degrees, volts, millivolts, and milliamps. The Engineering Units format is readily parsed by the majority of computer languages because the total data string length, including sign, digits and decimal point, does not exceed seven characters.

The data format is a plus (+) or minus (-) sign, followed by five decimal digits and a decimal point. The input range which is employed determines the resolution, or the number of decimal places used, as illustrated in the following table:

Input Range	Resolution
±15 mV, ±50 mV	1 µV (three decimal places)
100 mV, 150 mV, 500 mV	10 µV (two decimal places)
±1 V, ±2.5 V, ±5 V	100 µV (four decimal places)
±10 V	1 mV (three decimal places)
±20 mA	1 µA (three decimal places)
Type J and T thermocouple	0.01° C (two decimal places)
Type K, E, R, S, and B thermocouple	0.1° C (one decimal places)

Example 1

The input value is -2.65 V and the corresponding analog input module is configured for a range of ±5 V. The response to the Analog Data In command is:

-2.6500(cr)

Example 2

The input value is 305.5ºC. The analog input module is configured for a Type J thermocouple whose range is 0ºC to 760ºC. The response to the Analog Data In command is:

+305.50(cr)

Example 3

The input value is +5.653 V. The analog input module is configured for a range of ±5 V range. When the engineering units format is used, the ADAM Series analog input modules are configured so that they automatically provide an over range capability. The response to the Analog Data In command in this case is:

+5.6530(cr)

B.2 Analog Input Ranges - ADAM-5017

Module	Range Code	Input Range Description	Data Formats	+F.S.	Zero	-F.S.	Displayed Resolution	Actual Value
ADAM-5017	08h	±10 V	Engineering Units	+10.000	±00.000	-10.000	1 mV	Reading/10000
			% of FSR	+100.00	±000.00	-100.00	0.01%	
			Two's Complement	7FFF	0000	8000	1 LSB	
	09h	±5 V	Engineering Units	+5.0000	±0.0000	-5.0000	100.00 µV	Reading/10000
			% of FSR	+100.00	±000.00	-100.00	0.01%	
			Two's Complement	7FFF	0000	8000	1 LSB	
	0Ah	±1 V	Engineering Units	+1.0000	±0.0000	-1.0000	100.00 µV	Reading/100-00
			% of FSR	+100.00	±000.00	-100.00	0.01%	
			Two's Complement	7FFF	0000	8000	1 LSB	
	0Bh	±500 mV	Engineering Units	+500.00	±000.00	-500.00	10 µV	Reading/10
			% of FSR	+100.00	±000.00	-100.00	0.01%	
			Two's Complement	7FFF	0000	8000	1 LSB	
	0Ch	±150 mV	Engineering Units	+150.00	±000.00	-150.00	10 µV	Reading/100
			% of FSR	+100.00	±000.00	-100.00	0.01%	
			Two's Complement	7FFF	0000	8000	1 LSB	
	0Dh	±20 mA	Engineering Units	+20.000	±00.000	-20.000	1 µV	Reading/10000
			% of FSR	+100.00	±000.00	-100.00	0.01%	
			Two's Complement	7FFF	0000	8000	1 LSB	

B.3 Analog Input Ranges - ADAM-5018

Module	Range Code	Input Range Description	Data Formats	+F.S.	Zero	-F.S.	Displayed Resolution	Actual Value
ADAM-5018	00h	±15 mV	Engineering Units	+15.000	±00.000	-15.000	1 µV	Reading/1000
			% of FSR	+100.00	±000.00	-100.00	0.01%	
			Two's Complement	7FFF	0000	8000	1 LSB	
	01h	±50 mV	Engineering Units	+50.000	±00.000	-50.000	1 µV	Reading/100
			% of FSR	+100.00	±000.00	-100.00	0.01%	
			Two's Complement	7FFF	0000	8000	1 LSB	
	02h	±100 mV	Engineering Units	+100.00	±000.00	-100.00	10 µV	Reading/100
			% of FSR	+100.00	±000.00	-100.00	0.01%	
			Two's Complement	7FFF	0000	8000	1 LSB	
	03h	±500 mV	Engineering Units	+500.00	±000.00	-500.00	10 µV	Reading/10
			% of FSR	+100.00	±000.00	-100.00	0.01%	
			Two's Complement	7FFF	0000	8000	1 LSB	
	04h	±1 V	Engineering Units	+1.0000	±0.0000	-1.0000	100 µV	Reading/10000
			% of FSR	+100.00	±000.00	-100.00	0.01%	
			Two's Complement	7FFF	0000	8000	1 LSB	
	05h	±2.5 V	Engineering Units	+2.5000	±0.0000	-2.5000	100 µV	Reading/10000
			% of FSR	+100.00	±000.00	-100.00	0.01%	
			Two's Complement	7FFF	0000	8000	1 LSB	
	06h	±20 mA	Engineering Units	+20.000	±00.000	-20.000	1 µA	Reading/1000
			% of FSR	+100.00	±000.00	-100.00	0.01%	
			Two's Complement	7FFF	0000	8000	1 LSB	
	07h	Not Used						

Module	Range Code	Input Range Description	Data Formats	Maximum Specified Signal	Minimum Specified Signal	Displayed Resolution	Actual Value
ADAM-5018	0Eh	Type J Thermocouple 0° C to 760° C	Engineering Units	+760.00	+000.00	0.1° C	Reading/10
			% of FSR	+100.00	+000.00	0.01%	
			Two's Complement	7FFF	0000	1 LSB	
	0Fh	Type K Thermocouple 0° C to 1370° C	Engineering Units	+1000.0	+0000.0	0.1° C	Reading/10
			% of FSR	+100.00	+000.00	0.01%	
			Two's Complement	7FFF	0000	1 LSB	
	10h	Type T Thermocouple -100° C to 400° C	Engineering Units	+400.00	-100.00	0.1° C	Reading/10
			% of FSR	+100.00	-025.00	0.01%	
			Two's Complement	7FFF	E000	1 LSB	
	11h	Type E Thermocouple 0° C to 1000° C	Engineering Units	+1000.00	+0000.0	0.1° C	Reading/10
			% of FSR	+100.00	±000.00	0.01%	
			Two's Complement	7FFF	0000	1 LSB	
	12h	Type R Thermocouple 500° C to 1750° C	Engineering Units	+1750.0	+0500.0	0.1° C	Reading/10
			% of FSR	+100.00	+028.57	0.01%	
			Two's Complement	7FFF	2492	1 LSB	
	13h	Type S Thermocouple 500° C to 1750° C	Engineering Units	+1750.0	+0500.00	0.1° C	Reading/10
			% of FSR	+100.00	+028.57	0.01%	
			Two's Complement	7FFF	2492	1 LSB	
	14h	Type B Thermocouple 500° C to 1800° C	Engineering Units	+1800.0	+0500.0	0.1° C	Reading/10
			% of FSR	+100.00	+027.77	0.01%	
			Two's Complement	7FFF	2381	1 LSB	

B.4 Analog Input Ranges - ADAM-5017H

Range Code	Input Range	Data Formats	+Full Scale	Zero	-Full Scale	Displayed Resolution
00h	±10 V	Engineering	11	0	-11	2.7 mV
		Two's Comp	0FFF	0	EFFF	1
01h	0 ~ 10 V	Engineering	11	0	Don't care	2.7 mV
		Two's Comp	0FFF	0	Don't care	1
02h	±5 V	Engineering	5.5	0	-5.5	1.3 mV
		Two's Comp	0FFF	0	EFFF	1
03h	0 ~ 5 V	Engineering	5.5	0	Don't care	1.3 mV
		Two's Comp	0FFF	0	Don't care	1
04h	±2.5 V	Engineering	2.75	0	-2.75	0.67 mV
		Two's Comp	0FFF	0	EFFF	1
05h	0 ~ 2.5 V	Engineering	2.75	0	Don't care	0.67 mV
		Two's Comp	0FFF	0	Don't care	1
06h	±1 V	Engineering	1.375	0	-1.375	0.34 mV
		Two's Comp	0FFF	0	EFFF	1
07h	0 ~ 1 V	Engineering	1.375	0	Don't care	0.34 mV
		Two's Comp	0FFF	0	Don't care	1
08h	±500 mV	Engineering	687.5	0	-687.5	0.16 mV
		Two's Comp	0FFF	0	EFFF	1
09h	0 ~ 500 mV	Engineering	687.5	0	Don't care	0.16 mV
		Two's Comp	0FFF	0	Don't care	1
0ah	4 ~ 20 mA	Engineering	22	4.0	Don't care	5.3 µA
		Two's Comp	0FFF	02E9	Don't care	1
0bh	0 ~ 20 mA	Engineering	22	0	Don't care	5.3 µA
		Two's Comp	0FFF	0	Don't care	1

Note: The full scale values in this table are theoretical values for your reference; actual values will vary.

B.5 Analog Output Formats

You can configure ADAM analog output modules to receive data from the host in Engineering Units.

Engineering Units

Data can be represented in engineering units by setting bits 0 and 1 of the data format/checksum/integration time parameter to 0.

This format presents data in natural units, such as milliamps. The Engineering Units format is readily parsed by the majority of computer languages as the total data string length is fixed at six characters: two decimal digits, a decimal point and three decimal digits. The resolution is 5 µA.

Example:

An analog output module on channel 1 of slot 0 in an ADAM-5000 system at address 01h is configured for a 0 to 20 mA range. If the output value is +4.762 mA, the format of the Analog Data Out command would be #01S0C14.762<cr>

B.6 Analog Output Ranges

Range Code	Output Range Description	Data Formats	Maximum Specified Signal	Minimum Specified Signal	Displayed Resolution
30	0 to 20 mA	Engineedring Units	20.000	00.000	5 µA
		% of Span	+100.00	+000.00	5 µA
		Hexadecimal Binary	FFF	000	5 µA
31	4 to 20 mA	Engineedring Units	20.000	04.000	5 µA
		% of Span	+100.00	+000.00	5 µA
		Hexadecimal Binary	FFF	000	5 µA
32	0 to 10 V	Engineedring Units	10.000	00.000	2.442 mV
		% of Span	+100.00	+000.00	2.442 mV
		Hexadecimal Binary	FFF	000	2.442 mV

B.7 ADAM-5013 RTD Input Format and Ranges

Range Code (hex)	Input Range Description	Data Formats	Maximum Specified Signal	Minimum Specified Signal	Displayed Resolution
20	100 Ohms Platinum RTD -100 to 100° C a=0.00385	Engineering Units	+100.00	-100.00	±0.1° C
21	100 Ohms Platinum RTD 0 to 100° C a=0.00385	Engineering Units	+100.00	+000.00	±0.1° C
22	100 Ohms Platinum RTD 0 to 200° C a=0.00385	Engineering Units	+200.00	+000.00	±0.2° C
23	100 Ohms Platinum RTD 0 to 600° C a=0.00385	Engineering Units	+600.00	+000.00	±0.6° C
24	100 Ohms Platinum RTD -100 to 100° C a=0.00392	Engineering Units	+100.00	-100.00	±0.1° C
25	100 Ohms Platinum RTD 0 to 100° C a=0.00392	Engineering Units	+100.00	+000.00	±0.1° C
26	100 Ohms Platinum RTD 0 to 200° C a=0.00392	Engineering Units	+200.00	+000.00	±0.2° C

Note: See next page for table continuation.

Note: This table continued from previous page.

27	100 Ohms Platinum RTD 0 to 600° C a=0.00392	Engineering Units	+600.00	+000.00	±0.6° C
28	120 Ohms Nickel RTD -80 to 100° C	Engineering Units	+100.00	-80.00	±0.1° C
29	120 Ohms Nickel RTD 0 to 100° C	Engineering Units	+100.00	+000.00	±0.1° C

ADAM 5000 AI/AO Scaling

Module	Type	Range Low	Range High	Scale Low	Scale High	Data Format
5013RTD	385(IEC)	-100	100	0	65535	U16B
		0	100	0	65535	U16B
		0	200	0	65535	U16B
		0	600	0	65535	U16B
	395(JIS)	-100	100	0	65535	U16B
		0	100	0	65535	U16B
		0	200	0	65535	U16B
		0	600	0	65535	U16B
	Ni	-80	100	0	65535	U16B
		0	100	0	65535	U16B
5017AI	mV	-150	150	0	65535	U16B
	mV	-500	500	0	65535	U16B
	V	-1	1	0	65535	U16B
	V	-5	5	0	65535	U16B
	V	-10	10	0	65535	U16B
	mA	-20	20	0	65535	U16B
5017H AI	mV	-500	500	0	4095	U12B
	mV	0	500	0	4095	U12B
	V	-10	10	0	4095	U12B
	V	0	10	0	4095	U12B
	V	-5	5	0	4095	U12B
	V	0	5	0	4095	U12B
	V	-2.5	2.5	0	4095	U12B
	V	0	2.5	0	4095	U12B
	V	-1	1	0	4095	U12B
	V	0	1	0	4095	U12B
	mA	4	20	0	4095	U12B
	mA	0	20	0	4095	U12B
5018 AI	mV	-15	15	0	65535	U16B
	mV	-50	50	0	65535	U16B
	mV	-100	100	0	65535	U16B
	mV	-500	500	0	65535	U16B
	V	-1	1	0	65535	U16B
	V	-2.5	2.5	0	65535	U16B
	mA	-20	20	0	65535	U16B
	T/C(J)	0	760	0	65535	U16B
	T/C(K)	0	1370	0	65535	U16B
	T/C(T)	-100	400	0	65535	U16B
	T/C(E)	0	1000	0	65535	U16B
	T/C(R)	500	1750	0	65535	U16B
	T/C(S)	500	1750	0	65535	U16B
	T/C(B)	500	1800	0	65535	U16B
5024 AO	V	0	10	0	4095	U12B
	mA	4	20	0	4095	U12B
	mA	0	20	0	4095	U12B

Appendix C
Grounding Reference

Field Grounding and Shielding Application

Overview

Unfortunately, it's impossible to finish a system integration task at one timC. We always meet some trouble in the field. A communication network or system isn't stable, induced noise or equipment is damaged or there are storms. However, the most usual issue is just simply improper wiring, ie, grounding and shielding. You know the 80/20 rule in our life: we spend 20% time for 80% work, but 80% time for the last 20% of the work. So is it with system integration: we pay 20% for Wire / Cable and 0% for Equipment. However, 80% of reliability depends on Grounding and Shielding. In other words, we need to invest more in that 20% and work on these two issues to make a highly reliable system.

This application note brings you some concepts about field grounding and shielding. These topics will be illustrated in the following pages.

1. Grounding
   - 1.1 The 'Earth' for reference
   - 1.2 The 'Frame Ground' and 'Grounding Bar'
   - 1.3 Normal Mode and Common Mode
   - 1.4 Wire impedance
   - 1.5 Single Point Grounding
2. Shielding
   - 2.1 Cable Shield
   - 2.2 System Shielding
3. Noise Reduction Techniques
4. Check Point List

C.1 Grounding

1-1 The 'Earth' for reference

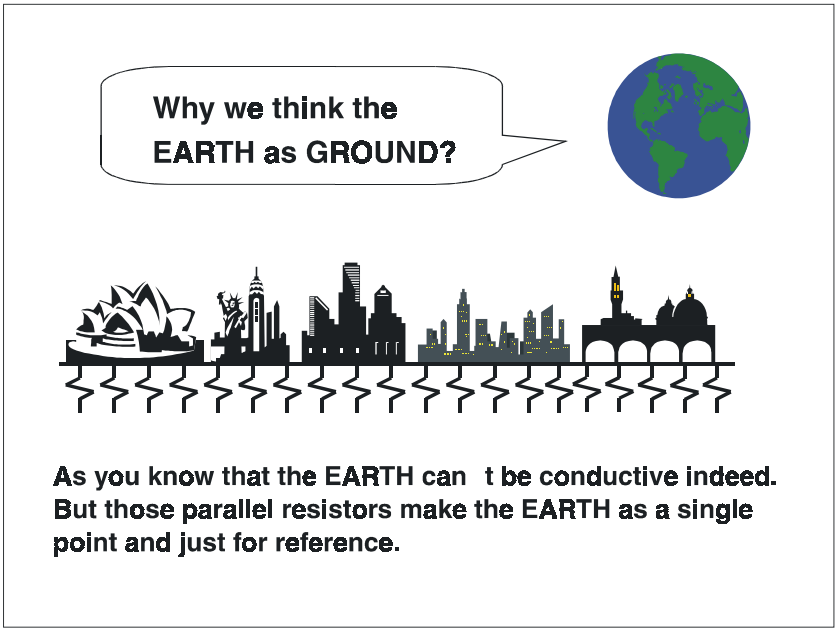

Figure C-1: Think the EARTH as GROUND.

As you know, the EARTH cannot be conductivC. However, all buildings lie on, or in, the EARTH. Steel, concrete and associated cables (such as lighting arresters) and power system were connected to EARTH. Think of them as resistors. All of those infinite parallel resistors make the EARTH as a single reference point.

1-2 The 'Frame Ground' and 'Grounding Bar'

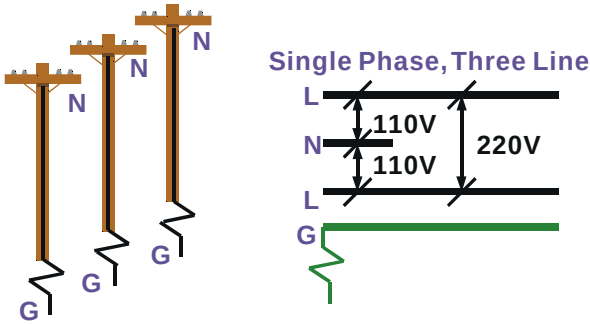

Neutral is the physical cable from Generator.
Ground is the local physical cable that connected to Ground Bar.

Figure C-2: Grounding Bar

Grounding is one of the most important issues for our system. Just like Frame Ground of the computer, this signal offers a reference point of the electronic circuit inside the computer. If we want to communicate with this computer, both Signal Ground and Frame Ground should be connected to make a reference point of each other's electronic circuit. Generally speaking, it is necessary to install an individual grounding bar for each system, such as computer networks, power systems, telecommunication networks, etc. Those individual grounding bars not only provide the individual reference point, but also make the earth a our ground!

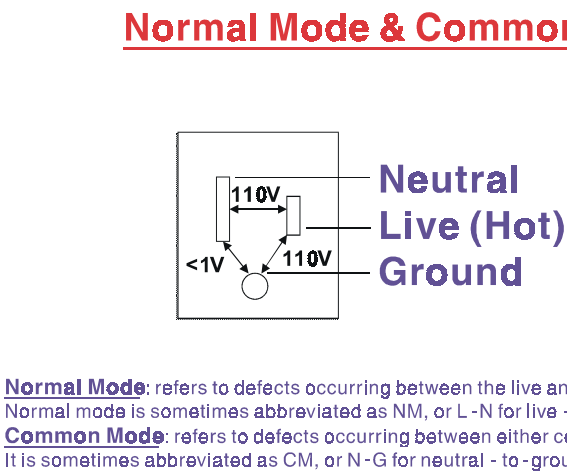

Figure C-3: Normal mode and Common modC

1-3 Normal Mode and Common Mode

Have you ever tried to measure the voltage between a live circuit and a concrete floor? How about the voltage between neutral and a concrete floor? You will get nonsense values. 'Hot' and 'Neutral' are just relational signals: you will get 110VAC or 220VAC by measuring these signals. Normal mode and common mode just show you that the Frame Ground is the most important reference signal for all the systems and equipments.

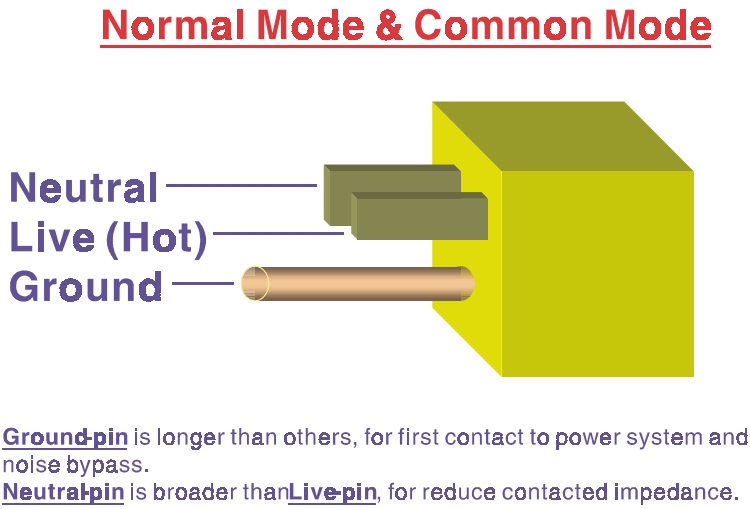

Figure C-4: Normal mode and Common modC

- Ground-pin is longer than others, for first contact to power system and noise bypass.
- Neutral-pin is broader than LivC-pin, for reducing contact impedancC.

1-4 Wire impedance

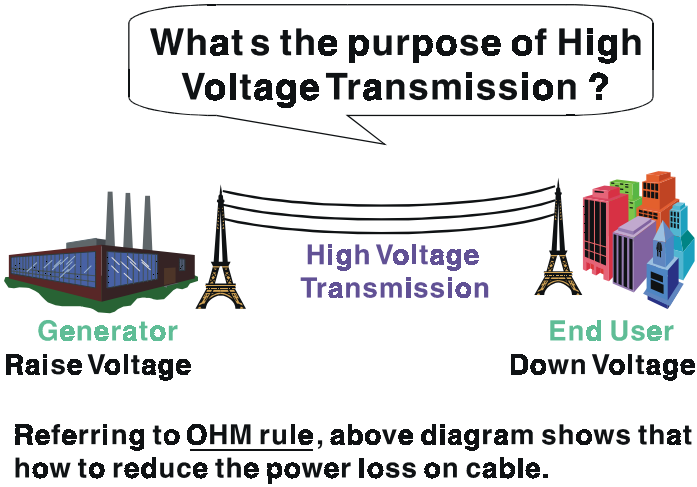

Figure C-5: The purpose of high voltage transmission

- What's the purpose of high voltage transmission?

We have all seen high voltage transmission towers. The power plant raises the voltage while generating the power, then a local power station steps down the voltagC. What is the purpose of high voltage transmission wires ? According to the energy formula, P = V * I, the current is reduced when the voltage is raised. As you know, each cable has impedance because of the metal it is made of. Referring to Ohm's Law, (V = I * R) this decreased current means lower power losses in the wirC. So, high voltage lines are for reducing the cost of moving electrical power from one place to another.

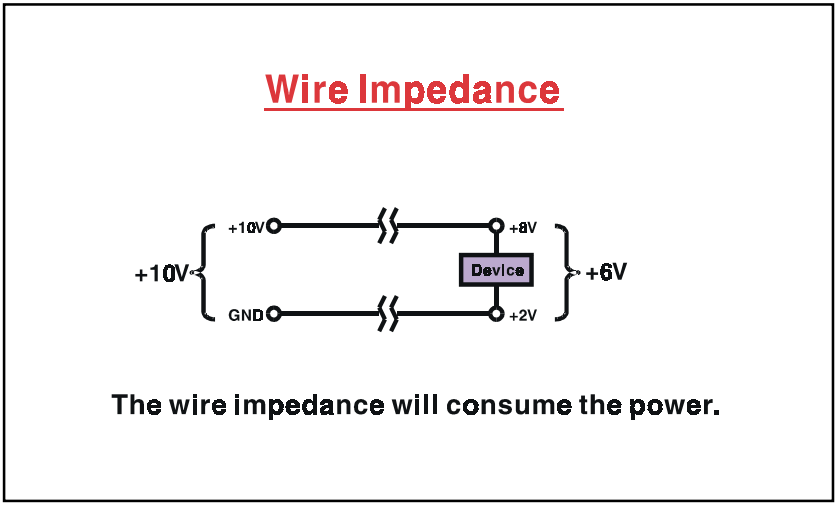

Figure C-6: wire impedancC

1-5 Single Point Grounding

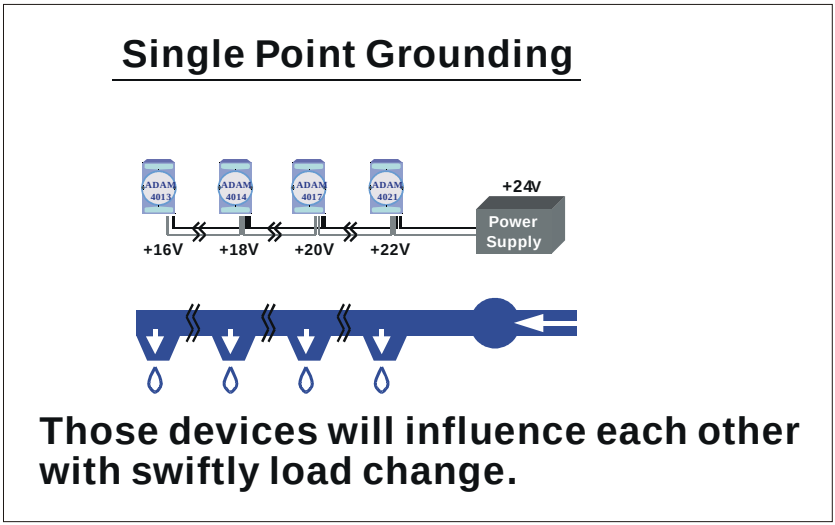

Figure C-7: Single point grounding (1)

- What's Single Point Grounding?

Maybe you have had an unpleasant experience while taking a hot shower in Winter. Someone turns on a hot water faucet somewhere else. You will be impressed with the cold water!

The bottom diagram above shows an example of how devices will influence each other with swift load change. For example, normally we turn on all the four hydrants for testing. When you close the hydrant 3 and hydrant 4, the other two hydrants will get more flow. In other words, the hydrant cannot keep a constant flow rate.

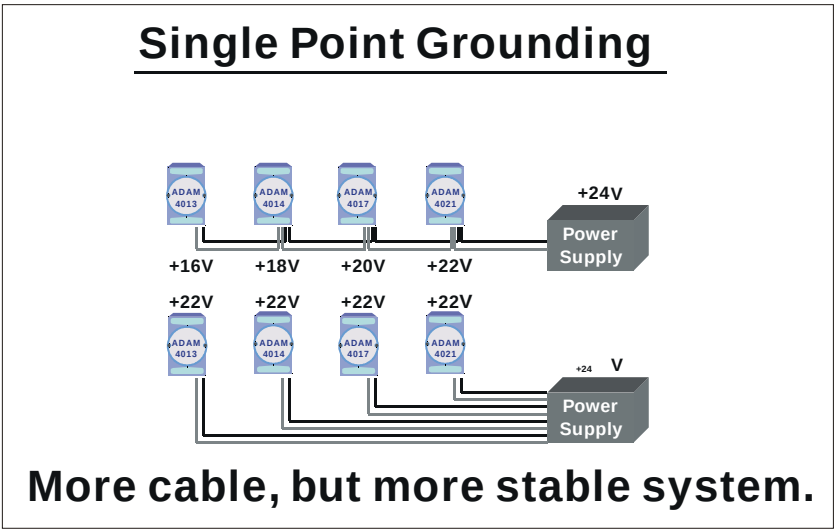

Figure C-8: Single point grounding (2)

The above diagram shows you that a single point grounding system will be a more stable system. If you use thin cable for powering these devices, the end device will actually get lower power. The thin cable will consume the energy.

C.2 Shielding

2-1 Cable Shield

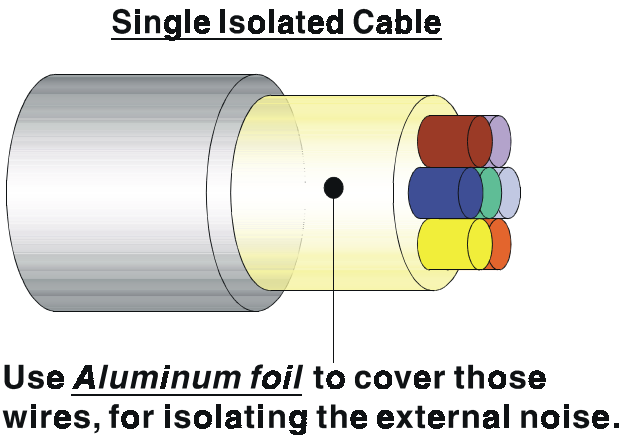

Figure C-9: Single isolated cable

- Single isolated cable

The diagram shows the structure of an isolated cablC. You see the isolated layer which is spiraled Aluminum foil to cover the wires. This spiraled structure makes a layer for shielding the cables from external noisC.

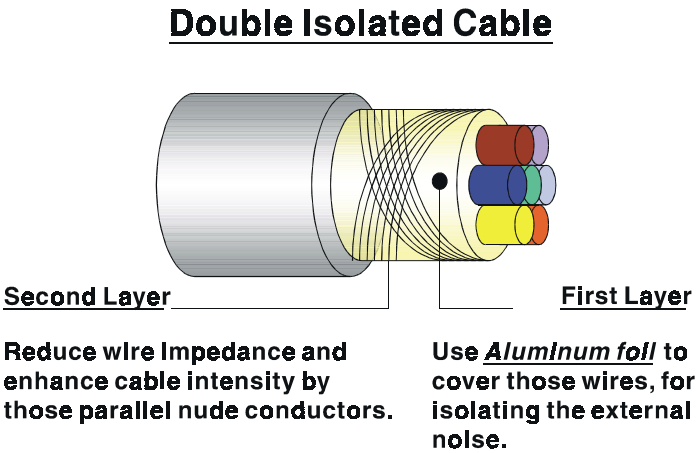

Figure C-10: Double isolated cable

- Double isolated cable

Figure 10 is an example of a double isolated cablC. The first isolating layer of spiraled aluminum foil covers the conductors. The second isolation layer is several bare conductors that spiral and cross over the first shield layer. This spiraled structure makes an isolated layer for reducing external noisC.

Additionally, follow these tips just for your referencC.

- The shield of a cable cannot be used for signal ground. The shield is designed for carrying noise, so the environment noise will couple and interfere with your system when you use the shield as signal ground.
- The higher the density of the shield - the better, especially for communication network.
- Use double isolated cable for communication network / AI / AO.
- Both sides of shields should be connected to their frame while inside the devicC. (for EMI consideration)
- Don't strip off too long of plastic cover for soldering.

2-2 System Shielding

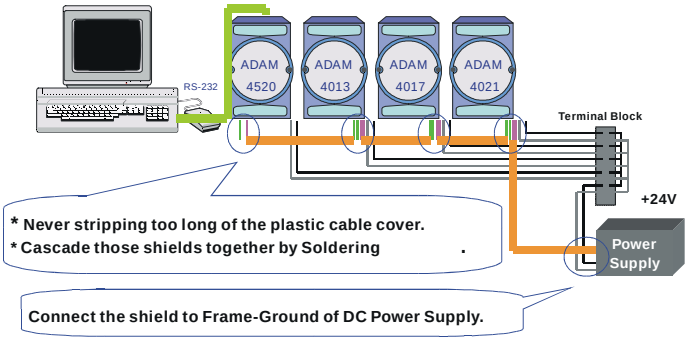

Figure C-11: System Shielding

- Never stripping too much of the plastic cable cover. This is improper and can destroy the characteristics of the Shielded-Twisted-Pair cablC. Besides, the bare wire shield easily conducts the noisC.
- Cascade these shields together by soldering. Please refer to following page for further detailed explanation.
- Connect the shield to Frame Ground of DC power supply to force the conducted noise to flow to the frame ground of the DC power supply. (The 'frame ground' of the DC power supply should be connected to the system ground)

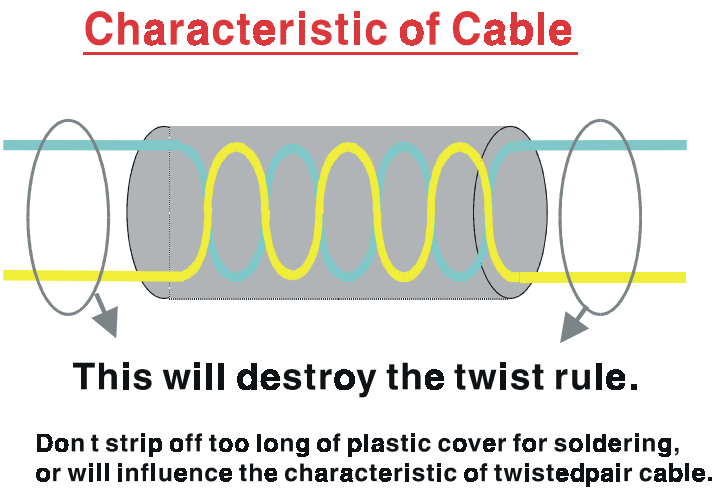

Figure C-12: The characteristic of the cable

- The characteristic of the cable

Don't strip off too much insulation for soldering. This could change the effectiveness of the Shielded-Twisted-Pair cable and open a path to introduce unwanted noise.

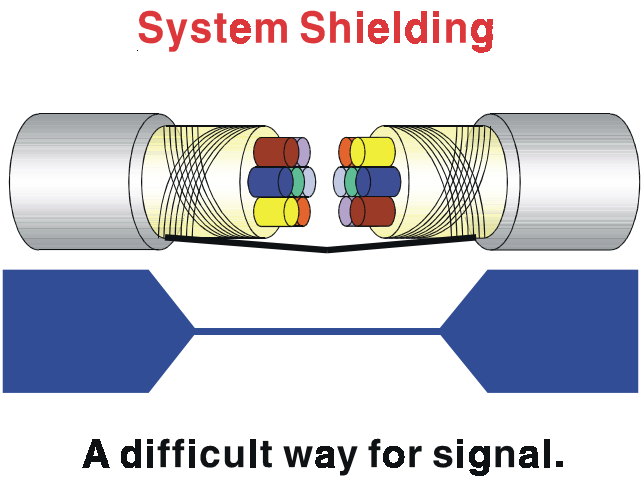

Figure C-13: System Shielding (1)

- Shield connection (1)

If you break into a cable, you might get in a hurry to achieve your goal. As in all electronic circuits, a signal will use the path of least resistancC. If we make a poor connection between these two cables we will make a poor path for the signal. The noise will try to find another path for easier flow.

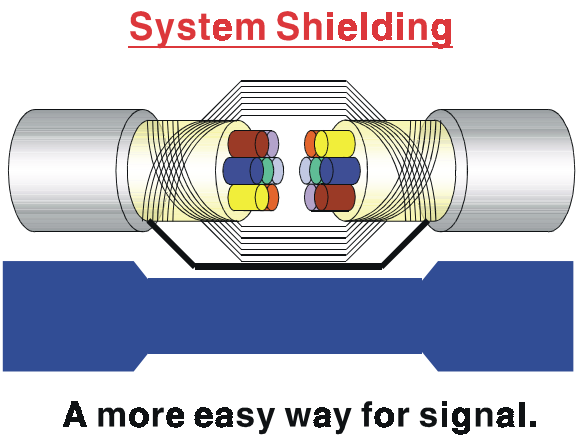

Figure C-14:System Shielding (2)

- Shield connection (2)

The previous diagram shows you that the fill soldering just makes an easier way for the signal.

C.3 Noise Reduction Techniques

- Isolate noise sources in shielded enclosures.
- Place sensitive equipment in shielded enclosure and away from computer equipment.
- Use separate grounds between noise sources and signals.
- Keep ground/signal leads as short as possiblC.
- Use Twisted and Shielded signal leads.
- Ground shields on one end ONLY while the reference grounds are not the same.
- Check for stability in communication lines.
- Add another Grounding Bar if necessary.
- The diameter of power cable must be over 2.0 mm^2.
- Independent grounding is needed for A/I, A/O, and communication network while using a jumper box.
- Use noise reduction filters if necessary. (TVS, etc)
- You can also refer to FIPS 94 Standard. FIPS 94 recommends that the computer system should be placed closer to its power source to eliminate load-induced common mode noisC.

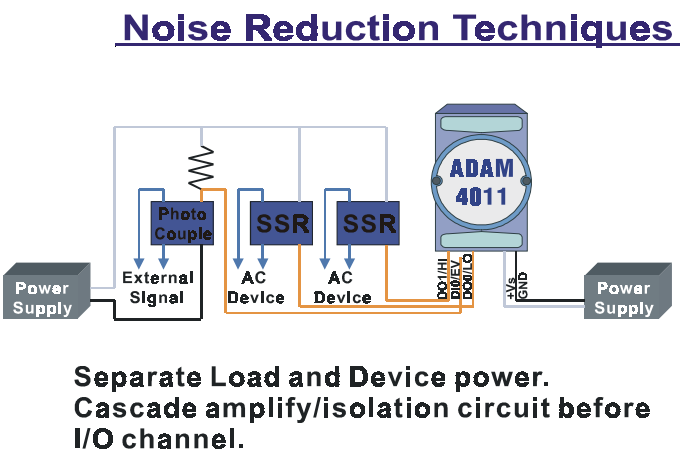

Figure C-15: Noise Reduction Techniques

C.4 Check Point List

- Follow the single point grounding rule?
- Normal mode and common mode voltage?
- Separate the DC and AC ground?
- Reject the noise factor?
- The shield is connected correctly?
- Wire size is correct?
- Soldered connections are good?
- The terminal screw are tight?