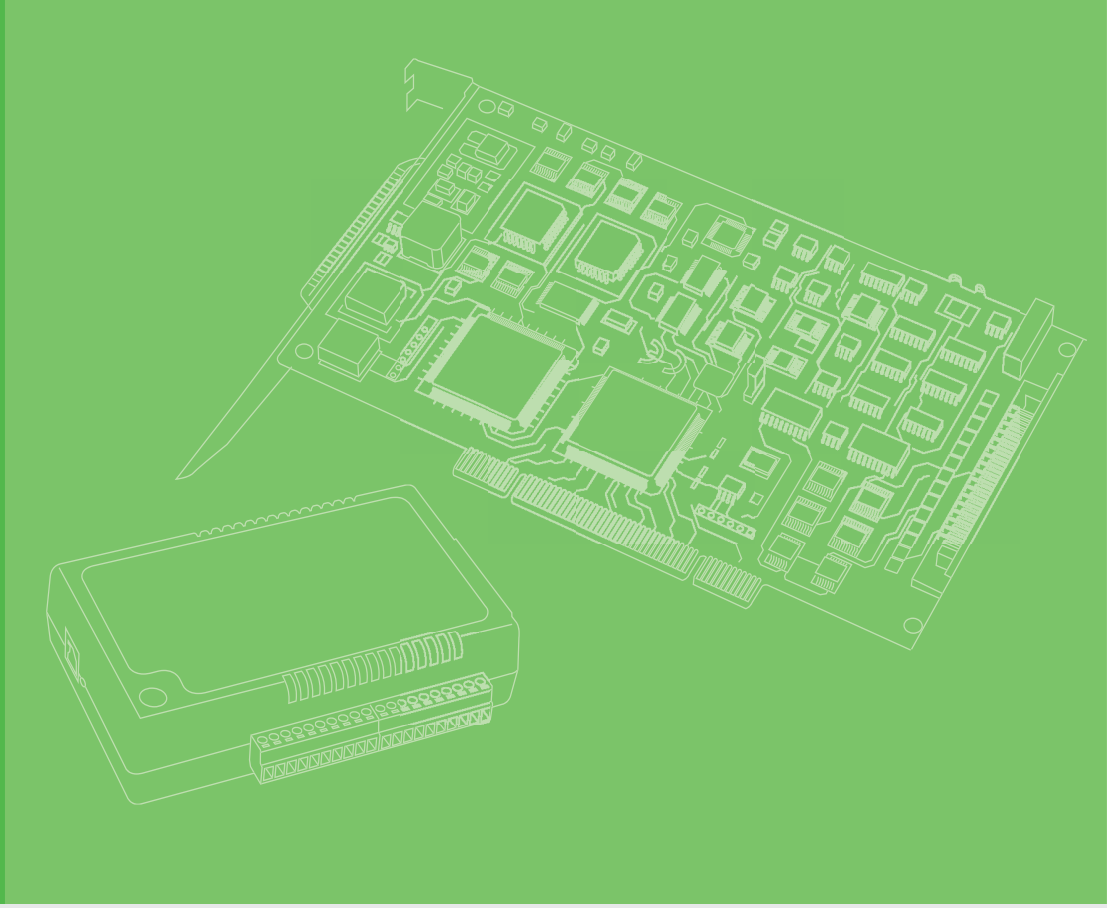

User Manual

PCIE-1730/1730H

32-Ch Isolated Digital I/O with Digital Filter PCI Express Card

ADVANTECH

Enabling an Intelligent Planet

Copyright

The documentation and the software included with this product are copyrighted 2021 by Advantech Co., Ltd. All rights are reserved. Advantech Co., Ltd. reserves the right to make improvements in the products described in this manual at any time without notice. No part of this manual may be reproduced, copied, translated, or transmitted in any form or by any means without the prior written permission of Advantech Co., Ltd. The information provided in this manual is intended to be accurate and reliable. However, Advantech Co., Ltd. assumes no responsibility for its use, nor for any infringements of the rights of third parties that may result from its use.

Acknowledgements

Intel and Pentium are trademarks of Intel Corporation.

Microsoft Windows and MS-DOS are registered trademarks of Microsoft Corp.

All other product names or trademarks are properties of their respective owners.

Product Warranty (2 Years)

Advantech warrants the original purchaser that each of its products will be free from defects in materials and workmanship for two years from the date of purchase.

This warranty does not apply to any products that have been repaired or altered by persons other than repair personnel authorized by Advantech, or products that have been subject to misuse, abuse, accident, or improper installation. Advantech assumes no liability under the terms of this warranty as a consequence of such events.

Because of Advantech's high quality-control standards and rigorous testing, most customers never need to use our repair service. If an Advantech product is defective, it will be repaired or replaced free of charge during the warranty period. For out-of-warranty repairs, customers will be billed according to the cost of replacement materials, service time, and freight. Please consult your dealer for more details.

If you believe your product is defective, follow the steps outlined below.

1. Collect all the information about the problem encountered. (For example, CPU speed, Advantech products used, other hardware and software used, etc.) Note anything abnormal and list any onscreen messages displayed when the problem occurs.
2. Call your dealer and describe the problem. Please have your manual, product, and any helpful information readily available.
3. If your product is diagnosed as defective, obtain a return merchandise authorization (RMA) number from your dealer. This allows us to process your return more quickly.
4. Carefully pack the defective product, a completed Repair and Replacement Order Card, and a proof of purchase date (such as a photocopy of your sales receipt) into a shippable container. Products returned without a proof of purchase date are not eligible for warranty service.
5. Write the RMA number clearly on the outside of the package and ship the package prepaid to your dealer.

Part No. 2001173013 Edition 4

Printed in Taiwan January 2024

Declaration of Conformity

CE

This product has passed the CE test for environmental specifications when shielded cables are used for external wiring. We recommend the use of shielded cables. This type of cable is available from Advantech. Please contact your local supplier for ordering information.

Test conditions for passing also include the equipment being operated within an industrial enclosure. In order to protect the product from damage caused by electrostatic discharge (ESD) and EMI leakage, we strongly recommend the use of CE-compliant industrial enclosure products.

FCC Class B

This equipment has been tested and found to comply with the limits for a Class B digital device, pursuant to part 15 of the FCC Rules. These limits are designed to provide reasonable protection against harmful interference in a residential installation. This equipment generates, uses, and can radiate radio frequency energy and, if not installed and used in accordance with the instructions, may cause harmful interference to radio communications. However, there is no guarantee that interference will not occur in a particular installation. If this equipment does cause harmful interference to radio or television reception, which can be determined by turning the equipment off and on, the user is encouraged to try to correct the interference by one or more of the following measures:

- Reorient or relocate the receiving antenna.
- Increase the separation between the equipment and receiver.
- Connect the equipment into an outlet on a circuit different from that to which the receiver is connected.
- Consult the dealer or an experienced radio/TV technician for assistance.

Technical Support and Assistance

1. Visit the Advantech website at www.advantech.com/support to obtain the latest product information.
2. Contact your distributor, sales representative, or Advantech's customer service center for technical support if you need additional assistance. Please have the following information ready before calling:
   - Product name and serial number
   - Description of your peripheral attachments
   - Description of your software (operating system, version, application software, etc.)
   - A complete description of the problem
   - The exact wording of any error messages

Warnings, Cautions, and Notes

Warning! *Warnings indicate conditions that if not observed can cause personal injury!*

Caution! *Cautions are included to help you avoid damaging hardware or losing data. For example,*

"Batteries are at risk of exploding if incorrectly installed. Do not attempt to recharge, force open, or heat the battery. Replace the battery only with the same or equivalent type recommended by the manufacturer. Discard used batteries according to the manufacturer's instructions."

Document Feedback

To assist us with improving this manual, we welcome all comments and constructive criticism. Please send all such feedback in writing to support@advantech.com.

Safety Precaution - Static Electricity

Follow these simple precautions to protect yourself from harm and the products from damage.

- To avoid electrical shock, always disconnect the power from the PC chassis before manual handling. Do not touch any components on the CPU card or other cards while the PC is powered on.
- Disconnect the power before making any configuration changes. A sudden rush of power after connecting a jumper or installing a card may damage sensitive electronic components.

Safety Instructions

1. Read these safety instructions carefully.
2. Retain this user manual for future reference.
3. Disconnect the equipment from all power outlets before cleaning. Use only a damp cloth for cleaning. Do not use liquid or spray detergents.
4. For pluggable equipment, the power outlet socket must be located near the equipment and easily accessible.
5. Protect the equipment from humidity.
6. Place the equipment on a reliable surface during installation. Dropping or letting the equipment fall may cause damage.
7. The openings on the enclosure are for air convection. Protect the equipment from overheating. Do not cover the openings.
8. Ensure that the voltage of the power source is correct before connecting the equipment to a power outlet.
9. Position the power cord away from high-traffic areas. Do not place anything over the power cord.
10. All cautions and warnings on the equipment should be noted.
11. If the equipment is not used for a long time, disconnect it from the power source to avoid damage from transient overvoltage.
12. Never pour liquid into an opening. This may cause fire or electrical shock.
13. Never open the equipment. For safety reasons, the equipment should be opened only by qualified service personnel.
14. If any of the following occurs, have the equipment checked by service personnel:
    - The power cord or plug is damaged.
    - Liquid has penetrated the equipment.
    - The equipment has been exposed to moisture.
    - The equipment is malfunctioning, or does not operate according to the user manual.
    - The equipment has been dropped and damaged.
    - The equipment shows obvious signs of breakage.
15. Do not leave the equipment in an environment with a storage temperature of below -20°C (-4°F) or above 60°C (140°F) as this may damage the components. The equipment should be kept in a controlled environment.
16. CAUTION: Batteries are at risk of explosion if incorrectly replaced. Replace only with the same or equivalent type as recommended by the manufacturer. Discard used batteries according to the manufacturer's instructions.
17. In accordance with IEC 704-1:1982 specifications, the sound pressure level at the operator's position does not exceed 70 dB (A).

DISCLAIMER: These instructions are provided according to IEC 704-1 standards. Advantech disclaims all responsibility for the accuracy of any statements contained herein.

Contents

Chapter 1 Overview.....1

1.1 Introduction 2
1.2 Features 2
1.3 Software Overview 3
1.4 Accessories 3
1.5 Installation Guide 4
1.6 Product Applications 4

Chapter 2 Hardware Installation 5

2.1 Unpacking Instructions 6
2.2 Driver Installation 7
2.3 Hardware Installation 7
Figure 2.1 Device Manager 8

Chapter 3 Signal Connections 9

3.1 Overview 10
3.2 Switch and Jumper Settings 10
Figure 3.1 Card Connectors, Jumpers, and Switches 10
Table 3.1: Power-On Configuration (JP2) 10
Table 3.2: Dry Contact Enable (JP3 & JP4) 10
Table 3.3: Board ID Settings (SW1) 11
3.3 Signal Connections 11
Figure 3.2 TTL-Level DI/O Connection 12
Figure 3.3 Open/Short Connection 13
Figure 3.4 Isolated DI Connection 13
Figure 3.5 Isolated Digital Output Connection 14

Appendix A Specifications 15

A.1 Specifications 16
A.1.1 Isolated Digital Input 16
A.1.2 Isolated Digital Output 16
A.1.3 Non-Isolated Digital Input/Output 16
A.1.4 General 17
A.1.5 Digital Filter Time 17

Appendix B Block Diagram 19

B.1 PCIE-1730 Series Diagram 20

Chapter 1

Overview

1.1 Introduction

Advantech's PCIE-1730 series cards are 32-channel isolated digital I/O cards that support PCI Express bus. The provision of isolated digital input channels make these cards ideal for environments with noise or floating potentials.

The following sections of this chapter provide information regarding the features, installation process, and relevant software and accessories for the PCIE-1730 series cards.

1.2 Features

PCIE-1730/1730H

- 32 isolated DI/O channels
- 32 TTL DI/O channels
- High output driving capacity with 500 mA per channel (maximum)
- High-voltage isolation on isolated I/O channels (2,500 V_{DC})
- Interrupt handling capability for all DI and IDI channels (PCIE-1730 only supports interrupt signals on 4 channels)
- Two 20-pin connectors for isolated DI/O channels and two 20-pin connectors for TTL DI/O channels
- D-type connector for isolated input and output channels
- High ESD protection (2,000 V_{DC})
- High over-voltage protection (70 V_{DC})
- Wide input range (10 ~ 30 V_{DC})
- Board ID to identify specific cards when multiple devices are installed
- 16 isolated and TTL digital input channels with digital filter (PCIE-1750H only)

Robust Protection

The PCIE-1730 series card digital input channels feature robust isolation protection for industrial, laboratory, and automation applications. The channels can withstand voltages of up to 2,500 V_{DC}, thereby minimizing the risk of accidental damage to the system components. If connected to an external input source with surge protection, PCIE-1730 cards can offer up to a maximum of 2,000 V_{DC} ESD protection. Even with an input voltage of 70 V_{DC}, the PCIE-1730 series cards can still function, albeit only for a short period of time.

Wide Input Range

The PCIE-1730 series cards support a wide input voltage range of 10 ~ 30 V_{DC}, making them suitable for most industrial applications that require a 12 V_{DC} or 24 V_{DC} input voltage.

Plug-and-Play Functionality

PCIE-1730 cards feature plug-and-play functionality and comply with PCI Express Specifications, Revision 1.0. The benefit of this is that there is no need to set jumpers or DIP switches during card installation. Instead, all bus-related settings, such as the base I/O address and interrupt signaling, are automatically configured because of the plug-and-play functionality, greatly streamlining installation.

Board ID

The PCIE-1730 series cards are equipped with a built-in DIP switch for setting a Board ID for each card when multiple cards are installed on the same PC chassis. This allows users to easily identify and access each card during hardware configuration and software programming.

Reset Protection

After a hot reset (i.e., when the system is restarted by interrupting the power), the PCIE-1730 series card can either retain the output values of each channel, or return to the default configuration of open status depending on the on-board jumper settings. This function protects the system from incorrect operations during unexpected system resets.

Note! For detailed specifications of the PCIE-1730 series, refer to Appendix A, Specifications.

1.3 Software Overview

Advantech offers device drivers, software development kits, third-party driver support, and application software that enable customers to fully utilize the functions of the PCIE-1730 series card. These software packages are provided on the accompanying CD-ROM and available for download from the Advantech website (http://www.advantech.com).

1.4 Accessories

PCIE-1730 series cards can be combined with a range of optional accessories for enhanced operation.

Wiring Cable

Advantech's PCL-10137 shielded cable is specially designed for PCIE-1730 series cards and provides high noise resistance. For enhanced signal quality, the signal wires are twisted into twisted-pair cables, reducing cross-talk and noise from other signal sources. Furthermore, the digital lines are separately sheathed and shielded to neutralize EMI/EMC problems.

Wiring Boards

Advantech's ADAM-3937 is a 37-pin D-type wiring terminal module for DIN-rail mounting. This terminal module can be connected to Advantech DAQ cards and provides easy access to individual pin connections for the PCIE-1730 series.

The PCLD-880 is a universal screw terminal board that can be integrated with any Advantech DAQ card that features a 37-pin D-type connector.

1.5 Installation Guide

Before installing the PCIE-1730 series card, please ensure you have the following necessary components:

- 1 x PCIE-1730 series card
- 1 x PCIE-1730 series user manual
- 1 x Advantech DAQNavi driver (included on the CD-ROM)
- 1 x Personal computer or workstation with a PCI-Express slot

Additional optional components are available for enhanced operation.

- 1 x Wiring cable PCL-10137 (optional)
- 1 x Wiring board PCLD-880, ADAM-3937 (optional)
- Advantech Navigator Utility via DAQNavi software

After obtaining all necessary components and additional accessories for enhanced operation, users can begin installing the PCIE-1730 series card.

1.6 Product Applications

- Industrial ON/OFF control
- Switch status sensing
- BCD interfacing
- Digital I/O control
- Industrial and laboratory automation
- Research and education

Chapter 2

Hardware Installation

This chapter provides unpacking instructions, an item checklist, and step-by-step procedures for driver and card installation.

2.1 Unpacking Instructions

Upon receiving your product, please check the contents to ensure that the following items have been included:

- 1 x PCIE-1730 series card
- 1 x Accompanying CD-ROM
- 1 x PCIE-1730 series user manual

The PCIE-1730 series cards contain electronic components and integrated circuits that are vulnerable to ESD. Before removing the card from the anti-static bag, take the following precautions to prevent potential ESD damage:

- Touch any metal part of the computer chassis with your hand to discharge any static electricity accumulated in your body. Alternatively wear a grounding strap at all times.
- Touch the anti-static bag to a metal part of the computer chassis before opening and removing components.
- When removing the card from the anti-static bag, hold the card by the metal bracket only.

After retrieving the card, first inspect the card for any external signs of damage (loose or damaged components etc.). If the card is visibly damaged, please notify the Advantech service department or your local sales representative immediately. Do not install a damaged card in your system.

Users should also pay extra attention to the following advice to ensure proper installation:

- Avoid physical contact with materials that may hold static electricity, such as plastic, vinyl, and styrofoam.
- When handling the card, hold it only by its edges. Do not touch the exposed metal pins of the connector or the electronic components.

Note! *Retain the anti-static bag for future use. The bag may be needed to store the card during hardware upgrades or when moving the PC to another location.*

2.2 Driver Installation

To ensure problem-free installation, all relevant drivers should be installed before installing the PCIE-1730 series card. The Advantech device drivers for the PCIE-1730 series card are provided on the accompanying CD-ROM shipped with your product.

2.3 Hardware Installation

Note! *Ensure that relevant drivers have been installed before attempting card installation.*

After driver installation, the PCIE-1730 series card can be installed via a PCI Express slot. Follow the steps below for card installation.

1. Power off the computer and unplug the power cord and any connected cables. (Note: Always verify that the computer is turned off and no power is flowing into the system before installing or removing any components.)
2. Remove the computer cover.
3. Remove the slot cover on the back panel of the computer.
4. Touch any metal surface of the computer to neutralize any static electricity that might be in your body.
5. Hold the PCIE-1730 series card by its edges and carefully align it with a PCI Express slot. Insert and press firmly to install the card. Do not use excessive force to avoid damaging the card.
6. Fasten the bracket of the PCI Express card on the back panel of the computer.
7. Connect any accessories to the PCI Express card.
8. Replace the cover of the computer chassis. Reconnect any cables that were removed in Step 1.
9. Plug in the power cord and turn on the computer.

Note! *After the card is installed, users can configure the device using the Advantech Navigator Utility program automatically installed during driver setup. Comprehensive device installation procedures should include device setup, configuration, and testing. The following sections provide instructions for setting up, configuring, and testing your device.*

After completing the card installation procedures, users can verify whether the PCIE-1730 series card is correctly installed using the Device Manager, as explained below.

1. Access the Device Manager via the Control Panel/System/Device Manager.
2. The PCIE-1730 series card should be included in the list of installed devices, as show in Figure 2.1.

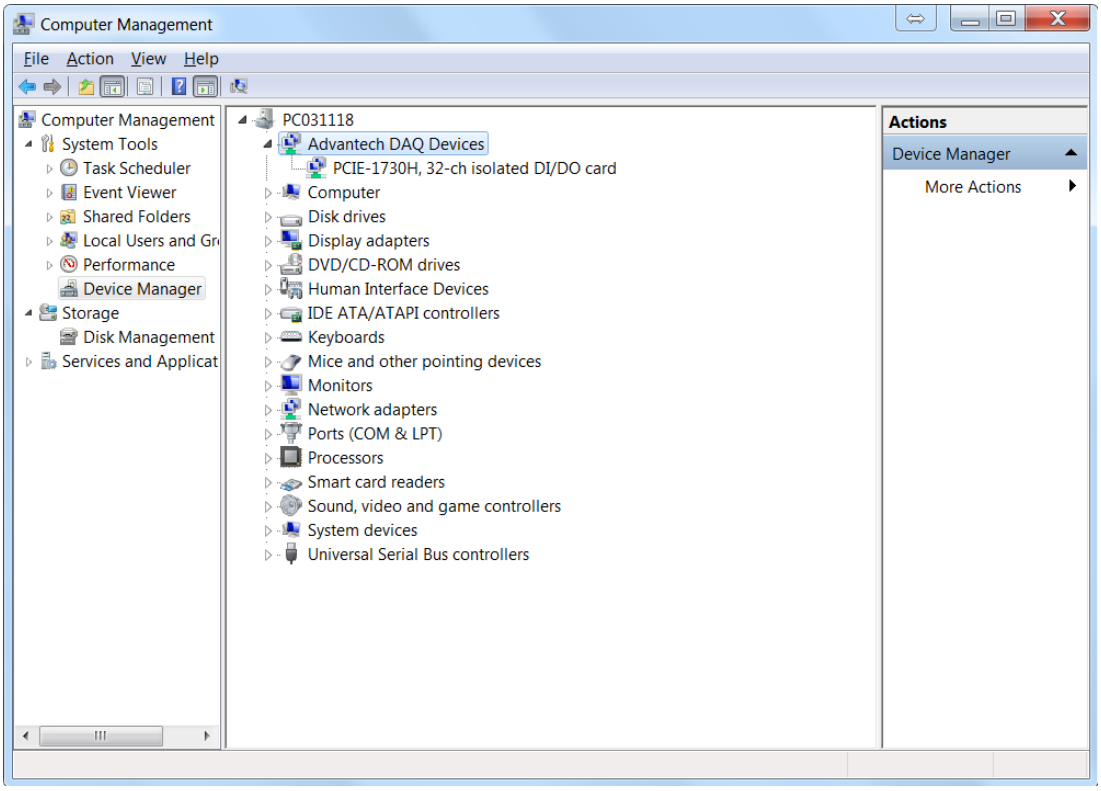

Figure 2.1 Device Manager

Note! *If your card is correctly installed, the card name should be included in the list of installed devices on the Device Manager tab. If the device is listed but marked with an exclamation mark "!", this means the card was not correctly installed. In this event, remove the card from the Device Manager list by clicking on the device and selecting the Remove option. Then perform the device installation process again.*

After the Advantech DAQNavi driver and PCIE-1730 series card is properly installed, users can configure the system using the Advantech Navigator Utility.

Chapter 3

Signal Connections

3.1 Overview

Maintaining signal connections is crucial for ensuring applications are sending and receiving data correctly. Good signal connections can prevent unnecessary and costly data losses and hardware damage. This chapter provides information that explains how to connect input and output signals to the PCIE-1730 series card via the I/O connector.

3.2 Switch and Jumper Settings

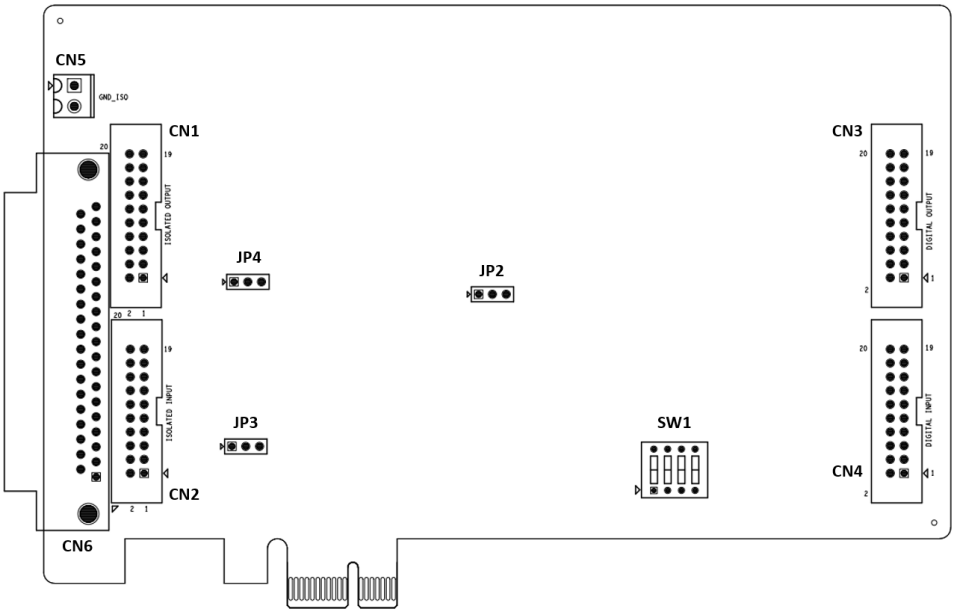

Figure 3.1 Card Connectors, Jumpers, and Switches

Table 3.1: Power-On Configuration (JP2)	
Jumper Setting	**Description**
	Keep last status after hot reset.
	Reset to default status after hot reset.*

* Default setting.

Table 3.2: Dry Contact Enable (JP3 & JP4)	
JP3 is for IDI<0..7> and JP4 is for IDI<8..15>.	
Jumper Setting	**Description**
	Dry contact disabled.*
	Dry contact enabled.

* Default setting.

Table 3.3: Board ID Settings (SW1)				
ID3	**ID2**	**ID1**	**ID0**	**Board ID**
1	1	1	1	0
1	1	1	0	1
1	1	0	1	2
1	1	0	0	3
1	0	1	1	4
1	0	1	0	5
1	0	0	1	6
1	0	0	0	7
0	1	1	1	8
0	1	1	0	9
0	1	0	1	10
0	1	0	0	11
0	0	1	1	12
0	0	1	0	13
0	0	0	1	14
0	0	0	0	15

Note: 1 = On; 0 = Off. The default setting is 0.

3.3 Signal Connections

PCIE-1730 Series Pin Assignments

CN1

IDO 0	1	2	IDO 1
IDO 2	3	4	IDO 3
IDO 4	5	6	IDO 5
IDO 6	7	8	IDO 7
IDO 8	9	10	IDO 9
IDO 10	11	12	IDO 11
IDO 12	13	14	IDO 13
IDO 14	15	16	IDO 15
EGND	17	18	EGND
NC	19	20	NC

CN2

IDI 0	1	2	IDI 1
IDI 2	3	4	IDI 3
IDI 4	5	6	IDI 5
IDI 6	7	8	IDI 7
IDI 8	9	10	IDI 9
IDI 10	11	12	IDI 11
IDI 12	13	14	IDI 13
IDI 14	15	16	IDI 15
ECOM0	17	18	ECOM1
ECOM0	19	20	ECOM1

CN3

DO 0	1	2	DO 1
DO 2	3	4	DO 3
DO 4	5	6	DO 5
DO 6	7	8	DO 7
DO 8	9	10	DO 9
DO 10	11	12	DO 11
DO 12	13	14	DO 13
DO 14	15	16	DO 15
GND	17	18	GND
NC	19	20	NC

CN4

DI 0	1	2	DI 1
DI 2	3	4	DI 3
DI 4	5	6	DI 5
DI 6	7	8	DI 7
DI 8	9	10	DI 9
DI 10	11	12	DI 11
DI 12	13	14	DI 13
DI 14	15	16	DI 15
GND	17	18	GND
NC	19	20	NC

CN5

EGND	1 2	EGND

CN6

Pin Description

IDIn (n = 0 ~ 15):
Isolated digital input
IDOn (n = 0 ~ 15):
Isolated digital output
ECOMn (n = 0 ~ 1):
External common VCC/GND of IDI
PCOM (n = 0 ~ 1):
Free wheeling common diode for IDO
EGND:
External ground for IDO
NC:
Not connected

DIn (n = 0 ~ 15):
TTL digital input
DOn (n = 0 ~ 15):
TTL digital output
GND:
TTL digital ground

IDI 0	1	20	IDI 1
IDI 2	2	21	IDI 3
IDI 4	3	22	IDI 5
IDI 6	4	23	IDI 7
IDI 8	5	24	IDI 9
IDI 10	6	25	IDI 11
IDI 12	7	26	IDI 13
IDI 14	8	27	IDI 15
ECOM0	9	28	ECOM1
PCOM0	10	29	EGND
IDO 0	11	30	IDO 1
IDO 2	12	31	IDO 3
IDO 4	13	32	IDO 5
IDO 6	14	33	IDO 7
IDO 8	15	34	IDO 9
IDO 10	16	35	IDO 11
IDO 12	17	36	IDO 13
IDO 14	18	37	IDO 15
PCOM1	19		

TTL-Level Digital Input/Output

The PCIE-1730 series cards have 16 TTL-level digital inputs and 16 TTL-level digital outputs. The connection configuration to exchange digital signals with other TTL devices is shown in Figure 3.2.

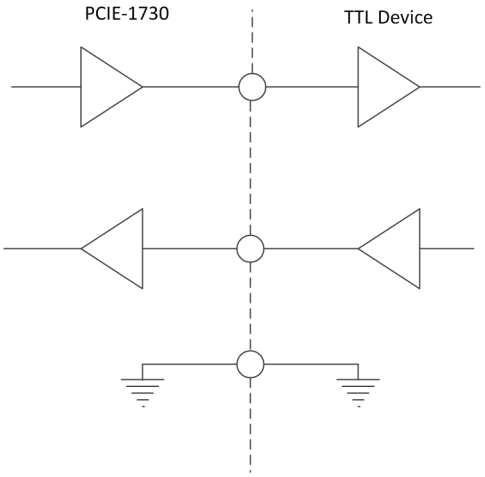

Figure 3.2 TTL-Level DI/O Connection

The connection configuration for receiving an OPEN/SHORT signal from a switch or relay is shown in Figure 3.3.

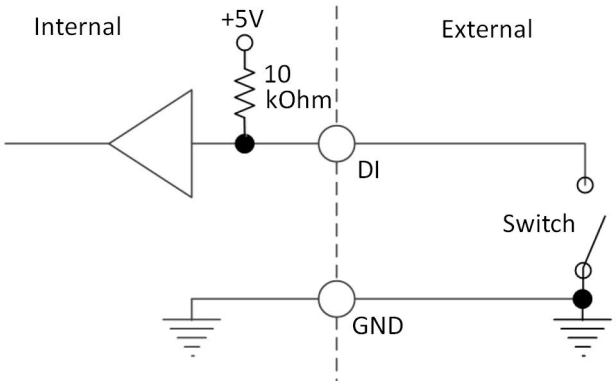

Figure 3.3 Open/Short Connection

Isolated Digital Input

Each isolated digital input channel accepts bi-directional 10~30V voltage inputs, which means that a user can apply positive or negative voltage to any input pin. Every eight input channels share one common external. (Channels 0 ~ 7 use ECOM0. Channels 8 ~ 15 use ECOM1.) Figure 3.4 shows how to connect an external input source to the card's isolated inputs.

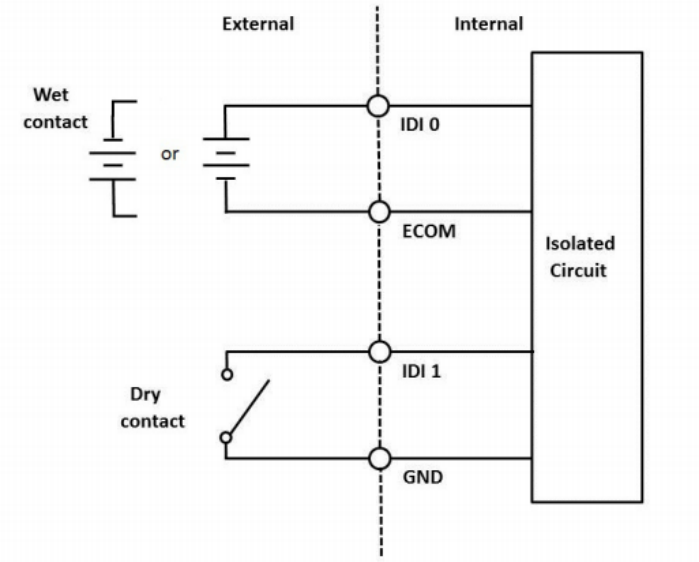

Figure 3.4 Isolated DI Connection

Isolated Digital Output

If the external voltage source (5 ~ 40 V) is connected to each isolated output channel (IDO) and its isolated digital output turns on (500 mA max./channel), the card's current will sink from the external voltage source. CN5 provides two EGND pins for IDO connection. Figure 3.5 shows how to connect an external output load to the card's isolated outputs.

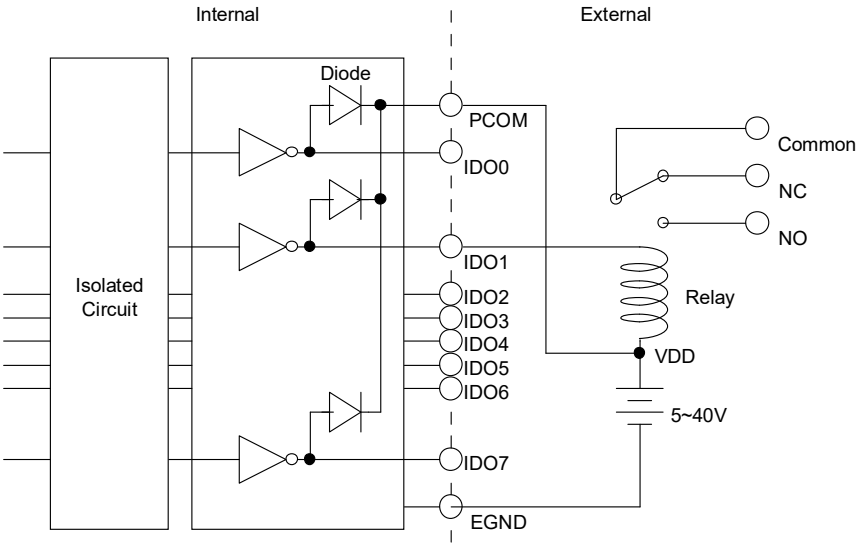

Figure 3.5 Isolated Digital Output Connection

Appendix A

Specifications

A.1 Specifications

A.1.1 Isolated Digital Input

Input Channels	16
Input Voltage	Logic 0: 3 V max. (0 V_{DC} min.)
	Logic 1: 10 V min. (30 V_{DC} max.)
Input Current	12 V_{DC} @ 3.18 mA
	24 V_{DC} @ 6.71 mA
Interrupt-Capable Channel	2 for PCIE-1730, 16 for PCIE-1730H
Digital Filter Channel	16 (for PCIE-1730H only)
Isolation Protection	2,500 V_{DC}
Overvoltage Protection	70 V_{DC}
ESD Protection	2,000 V_{DC}
Opto-Isolator Response	50 µs

A.1.2 Isolated Digital Output

Output Channels	16
Output Type	Sink (NPN)
Isolation Protection	2,500 V_{DC}
Output Voltage	5 ~ 40 V_{DC}*
Sink Current	500 mA max./channel
Opto-Isolator Response	50 µs

Note! *When an inductance load is connected, the maximum output voltage will be 24 V_{DC}.*

A.1.3 Non-Isolated Digital Input/Output

Input Channels	16	
Input Voltage	Low	0.8 V max.
	High	2.0 V min.
Output Channels	16	
Output Voltage	Low	0.5 V max. @ +24 mA (sink)
	High	2.4 V min. @ -15mA (source)
Interrupt-Capable Channel	2 for PCIE-1730, 16 for PCIE-1730H	
Digital Filter Channel	16 (for PCIE-1730H only)	

A.1.4 General

I/O Connector Type	37-pin D-sub female	
Dimensions	175 x 100 mm (6.9 x 3.9 in)	
Power Consumption	Typical	+3.3 V @ 280 mA
		+12 V @ 330 mA
	Max.	+3.3 V @ 420 mA
		+12V @ 400 mA
Temperature	Operating	0 ~ 60°C (32 ~ 140°F) (refer to IEC 68-2-1, 2)
	Storage	-25 ~85°C (-4 ~ 185°F)
Relative Humidity	5 ~ 95%RH non-condensing (refer to IEC 68-2-3)	
Certification	CE	

A.1.5 Digital Filter Time

Digital Filter Time [sec.] = 2n/(8 x 10^6) n: = setting data (0 ~ 20)

Setting Data (n)	Digital Filter Time	Setting Data (n)	Digital Filter Time	Setting Data (n)	Digital Filter Time
0 (00h)	The filter function is not used.	7 (07h)	16 µsec	14 (0Eh)	2.048 msec
1 (01h)	0.25 µsec	8 (08h)	32 µsec	15 (0Fh)	4.096 msec
2 (02h)	0.5 µsec	9 (09h)	64 µsec	16 (10h)	8.192 msec
3 (03h)	1 µsec	10 (0Ah)	128 µsec	17 (11h)	16.384 msec
4 (04h)	2 µsec	11 (0Bh)	256 µsec	18 (12h)	32.768 msec
5 (05h)	4 µsec	12 (0Ch)	512 µsec	19 (13h)	65.536 msec
6 (06h)	8 µsec	13 (0Dh)	1.024 msec	20 (14h)	131.072 msec

Appendix B

Block Diagram

B.1 PCIE-1730 Series Diagram

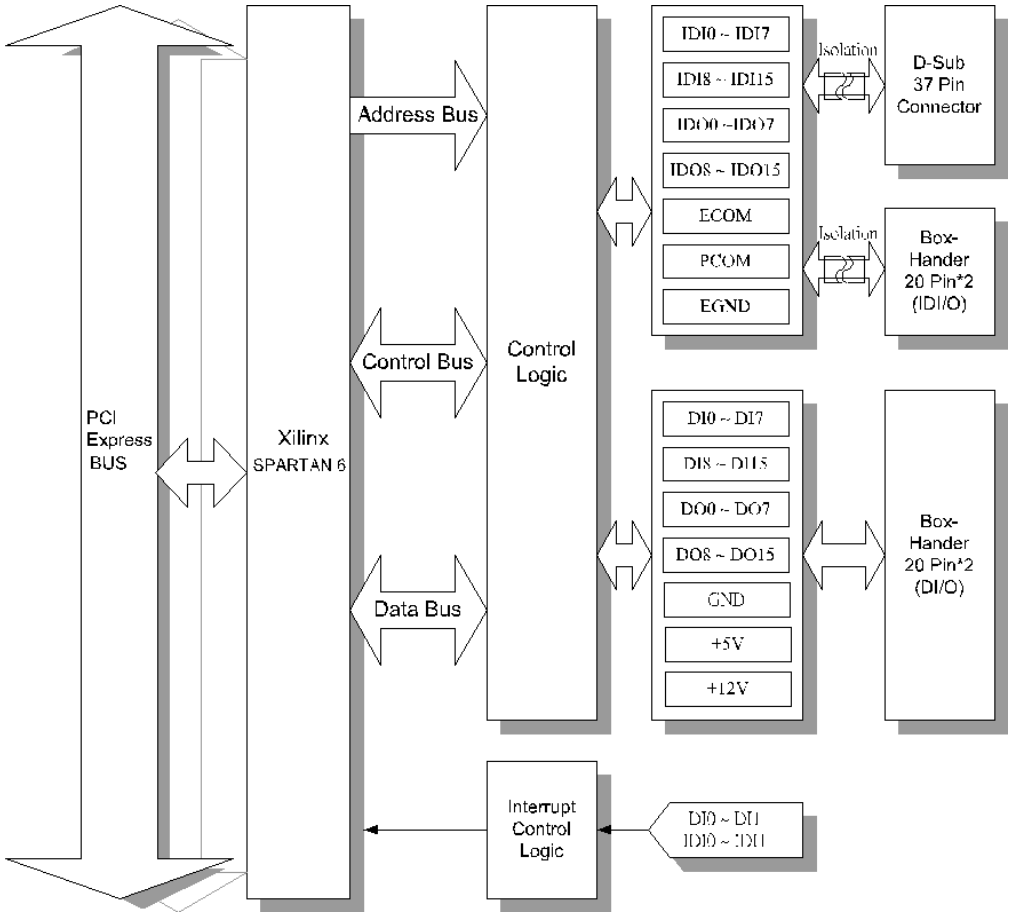

ADVANTECH

Enabling an Intelligent Planet

www.advantech.com

Please verify specifications before quoting. This guide is intended for reference purposes only. All product specifications are subject to change without notice.
No part of this publication may be reproduced in any form or by any means, such as electronically, by photocopying, recording, or otherwise, without prior written permission from the publisher.
All brand and product names are trademarks or registered trademarks of their respective companies.
© Advantech Co., Ltd. 2023