PCA-6773 ISA Intel ULV400, 650/LV800, 933 Slot PC. CPU/VGA/LCD/LVDS/LAN/CFC and PC/104 Startup Manual

Packing List

Before you begin installing your card, please make sure that the following materials have been shipped:

- 1 PCA-6773 all-in-one single board computer
- 1 Startup manual
- CD-ROM or disks for utility, drivers, and manual (in PDF format)
- 1 Y cable for PS/2 Keyboard, PS/2 Mouse — p/n: 1700060202
- 1 E-IDE(HDD) cable(600mm) — p/n: 170140060A
- 1 FDD cable(700mm) — p/n: 1701340705
- 1 COM port cable — p/n: 1701140201
- 1 ATX/AT power cable — p/n: 1703080101
- Mini Jumper — p/n: 1653302122

If any of these items are missing or damaged, contact your distributor or sales representative immediately.

Note 1: For detailed contents of the PCA-6773, please refer to the enclosed CD Disc or disk (in PDF format).
Note 2: Acrobat Reader is required to view any PDF file. Acrobat Reader can be downloaded at: www.adobe.com/Prodindex/acrobat/readstep.html(Acrobat is a trademark of Adobe.)

For more information on this and other Advantech products, please visit our website at:

http://www.advantech.com

http://www.advantech.com/epc

For technical support and service, please visit our support website at:

http://service.advantech.com.tw/eservice/

This manual is for the PCA-6773 series Rev. A1.

Part No. 200K677301 3rd Edition
Nov. 2004

Specifications

Standard SBC Functions

- **CPU:** On board Intel ULV400,650/LV800(optional), 933MHz CPU
- **System chipset:** VIA VT8606"TwisterT"+VT82C686B
- **BIOS:** Award 256KB Flash BIOS
- **System memory:** SDRAM SODIMMx1, MAX: 512MB, (Optional: SODIMMx2, up to 1GB)
- **2nd cache memory:** Celeron ULV400,650:256K P-III LV800,933:512 K
- **SSD:** Support CompactFlash.Card typeI/II
- **Watchdog timer:** 1-62 Sec,System reset or IRQ11
- **Expansion Interface:** 1x16-bit ISA Slot, 1xPC/104 connector
- **Battery:** Lithium 3/V/196 mAH

I/O Interface

- **MIO:**1xEIDE(ATA-100), 1xFDD, 1xK/B, 1xMouse, 1xRS-232/422/485,1xRS-232,1xLPT
- **IrDA:** 115kbps SIR, IrDA 1.0 compliant
- **Ethernet:**10/100 BASE-T,onboard RJ45 connector
- **USB:**4 USB ports,USB 1.1 compliant

VGA/LCD Interface

- **Chipset:** VIA TwisterT chip with integrated Savage4 2D/3D/Video Accelerator
- **Frame buffer:** Supports 8/16/32 MB frame buffer with system memory
- **LVDS Interface:**Supports LVDS Interface
- **LCD Interface:** 4X AGP VGA/LCD interface, Support for 9,12,15,18,24,36 bit TFT
- **Display modes:**
  CRT Modes:
  1280 x 1024@16bpp (60 Hz),
  1024 x 768 @16bpp (85 Hz)
  800x600@16bpp (60 Hz)
  LCD/Simultaneous Modes:
  1280 x 1024@16 bpp (60 Hz),
  1024 x 768@16 bpp (60 Hz)

Ethernet interface

- **Chipset:** Intel 82551ER, 82551QM(optional),RealTek 8139C(optional)
- **Conection:**on-board RJ-45
- **BootROM:**Built-in system
- **I/O address switchless setting**

PCA-6773 ISA Intel ULV400, 650/LV800, 933 SlotPC with VGA/LCD/LVDS/LAN/CFC and PC

Mechanical and Environmental

- **Dimensions (L x W):** 185 x 122 mm (7.3” x 4.8”)
- **Power supply voltage:** +5 V ± 5%, +12 V ± 5%
- **Power requirements:**
  Max: 5 A @ +5 V, 201m A @+12 V(with 128 MB SDRAM,Intel ULV-400 MHz CPU)
  Typical : 2.55 A @ +5 V, 48 mA @+12V(with 128 MB SDRAM,Intel ULV-400 MHz CPU)
- **Operating Temperature:** 0 ~ 60°C(32~140°F),operation
- **Operating Humidity:** 0%~90% ralative humidity,non-condensing

Jumpers and Connectors

The board has a number of jumpers that allow you to configure your system to suit your application.

The table below lists the function of each of the jumpers and connectors.

Label	Function
JP1	CMOS clear
JP2	Watchdog timer output selection
J1	RS232/422/485 Selection

JP1: CMOS clear function	
Closed pins	Result
1-2	normal*
2-3	Clear CMOS





JP2: Watchdog timer output option	
Closed pins	Result
1-2	Watch Dog *
2-3	IRQ11





J1: RS-232/422/485 select	
1-2	RS-232 *
3-4	RS-422
5-6	RS-485

RS-232* **RS-422** **RS-485**

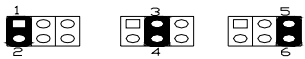

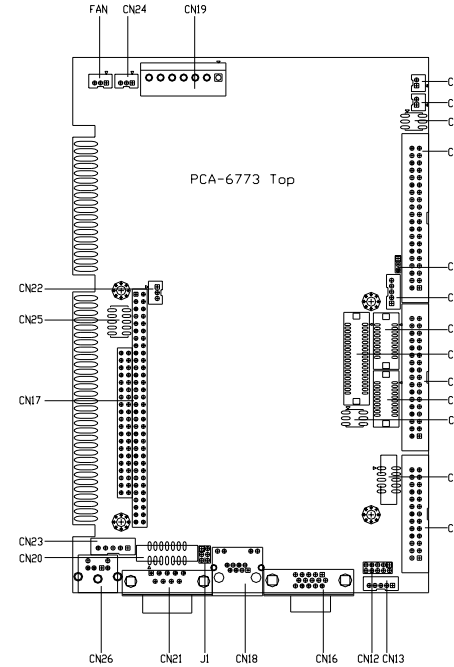

PCA-6773 Jumper & Connectors

Connectors	
Label	**Function**
CN1	PWR_SW Connector
CN2	Reset Connector
CN3	Primary IDE Connector
CN4	Floppy
CN5	LPT Connector
CN6	HDD,PWR LED Connector& WDT Output
CN7	LCD BlackLight Connector
CN8	LCD INV PWR Connector
CN9	USB 3,4 Connector
CN10	LVDS Connector
CN11	LCD Connector2
CN12	Audio I/F Connector
CN13	IR Connector
CN14	LCD Connector1
CN15	DIO Connector
CN16	D-SUB VGA Connecor
CN17	PC/104
CN18	LAN Connector
CN19	Main power Connector
CN20	COM2
CN21	COM1
CN22	Negative Power Input Connector
CN23	EXT_KB Connector
CN24	ATX Suspend Power Connector
CN25	USB1,2 Connector
CN26	KeyBoard/Mouse Connector
CN28	CF Connector

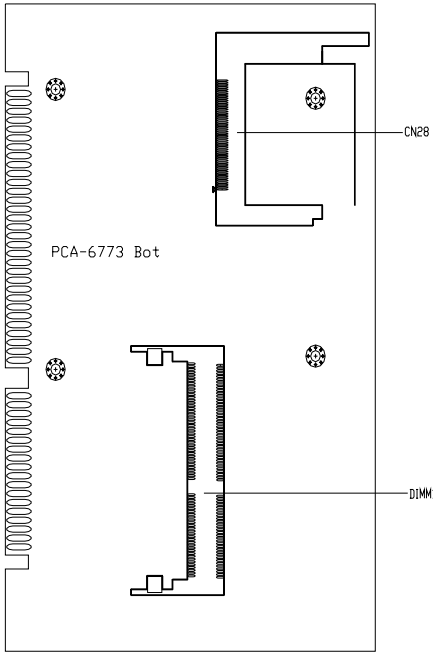

PCA-6773 Locating Jumpers (solder side)

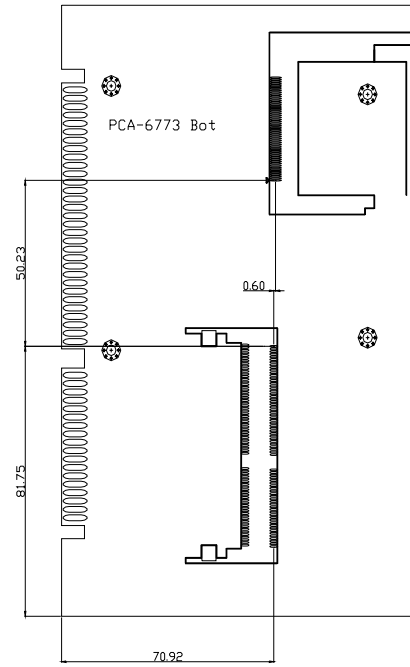

PCA-6773 Dimensions (solder side)

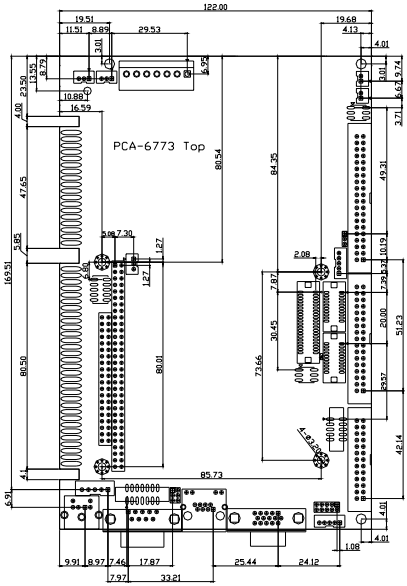

PCA-6773 Dimensions(component side)