2.5” PCIe SSD 920 Datasheet

(SQF-C25xx-xG-ECx)

CONTENTS

1. Overview 4
2. Features 5
3. Specification Table 6
4. General Description 8
5. Pin Assignment and Description 11
6. NVMe Command List 13
7. Identify Device Data 14
8. System Power Consumption 16
9. Physical Dimension 17
Appendix: Part Number Table 18

Revision History

Rev.	Date	History
0.1	2018/5/16	1. Preliminary release
0.2	2018/8/18	1. Update PN information
0.3	2018/9/18	1. Update Physical Dimension (draft version)
0.4	2018/9/27	1. Modify PN’s Flash combination
0.5	2019/1/23	1. Update performance & related information
0.6	2019/5/16	1. Update product description
0.7	2019/7/1	1. Added function support situation
0.8	2020/4/9	1. Added power consumption information
0.9	2023/4/5	1. Update Advanced Device Security Features

Advantech reserves the right to make changes without further notice to any products or data herein to improve reliability, function, or design. Information furnished by Advantech is believed to be accurate and reliable. However, Advantech does not assure any liability arising out of the application or use of this information, nor the application or use of any product or circuit described herein, neither does it convey any license under its patent rights nor the rights of others.
Copyright © 1983-2023 Advantech Co., Ltd. All rights reserved.

1. Overview

Advantech SQFlash 920 series 2.5” PCIe SSD (Solid State Drive) delivers all the advantages of flash disk technology with PCIe Gen3 x4 interface, including being compliant with standard 2.5-inch form factor and SFF-8639 connector. The device is designed based on the standard 38-pin interface for data segment and 15-pin for power segment, as well as operating at a maximum operating frequency of 200MHz with 25MHz external crystal. Its capacity could provide a wide range up to 7.6TB. Moreover, it can reach up to 3,200MB/s read as well as 3,000MB/s write high performance based on Toshiba 64-layer 3D TLC Flash.

2. Features

- **PCIe Interface**
  - Compliant with NVMe1.3
  - Compatible with PCIe I/II/III x4 interface
  - Support up to queue depth 64K
  - Support power management
- **Operating Voltage：12.0V**
- **Support LDPC with RAID ECC**
- **AES256、TCG-OPAL、TRIM、AHCI supported**
- **Hardware Quick Erase supported (optional)**
- **Voltage Stabilizer supported (optional)**
- **Temperature Ranges[1]**
  - Commercial Temperature
    - 0℃ to 70℃ for operating
    - -40℃ to 85℃ for storage
  - Industrial Temperature
    - -40℃ to 85℃ for operating
    - -40℃ to 85℃ for storage

  *Note : 1. Based on SMART Attribute (Byte index [2 :1] of PCIe-SIG standard, which measured by thermal sensor
- **Mechanical Specification**
  - Shock：1,500G / 0.5ms
  - Vibration：20G / 80~2,000Hz
- **Humidty**
  - Humidity：5% ~ 95% under 55℃
- **Acquired RoHS、WHQL、CE、FCC Certificate**
- **Acoustic：0 dB**
- **Dimension：100.20 mm x 69.85 mm x 15 mm**

3. Specification Table

■ Performance

* Preliminary, subject to change based on firmware migration.

Burst Performance

		Read (MB/sec)	Write (MB/sec)
3D TLC (BiCS3)	240 GB	3000	1000
	480 GB	3200	2000
	960 GB	3200	3000
	1920 GB	3200	3000
	3840 GB	3200	2800
	7680 GB	2500	2200

* Performance measured by IOMeter with QD32, 8GB data pattern.

* Burst off by default for enterprise application, adjustable depends on different application requirement.

Sustained Performance

		Sequential (MB/sec)		Random (IOPS @4K)	
		Read	Write	Read	Write
3D TLC (BiCS3)	240 GB	3051.9	346.6	168K	76K
	480 GB	3381.4	522.7	180K	120K
	960 GB	3360.3	970.4	350K	230K
	1920 GB	3269.7	1137.2	600K	260K
	3840 GB	3258.4	977.1	480K	220K
	7680 GB	2984.5	973.2	380K	200K

* Performance measured by IOMeter with QD32, 8GB data pattern.

Endurance

JEDEC defined an endurance rating TBW (TeraByte Written), following by the equation below, for indicating the number of terabytes a SSD can be written which is a measurement of SSDs’ expected lifespan, represents the amount of data written to the device.

TBW = [(NAND Endurance) x (SSD Capacity)] / WAF

- **NAND Endurance**: Program / Erase cycle of a NAND flash.
  - SLC: 100,000 cycles
  - Ultra MLC: 30,000 cycles
  - MLC: 3,000 cycles
  - 3D TLC (BiCS3): 3,000 cycles
- **SSD Capacity**: SSD physical capacity in total of a SSD.
- **WAF**: Write Amplification Factor (WAF), as the equation shown below, is a numerical value representing the ratio between the amount of data that a SSD controller needs to write and the amount of data that the host’s flash controller writes. A better WAF, which is near to 1, guarantees better endurance and lower frequency of data written to flash memory.

WAF = (Lifetime write to flash) / (Lifetime write to host)

Endurance measurement is based on JDEC 219 workload and verified with following workload conditions,

- PreCond%full = 100%
- Trim commands enabled
- Random data pattern.

➢ **SQFlash 920 2.5” PCIe SSD TBW**

	WAF	TBW
		3D TLC (BiCS3)
240 GB	2.00	380
480 GB	1.81	850
960 GB	1.85	1665
1920 GB	1.97	3115
3840 GB	1.97	6230
7680 GB	1.97	12460

4. General Description

■ Error Correction Code (ECC)

Flash memory cells will deteriorate with use, which might generate random bit errors in the stored data. Thus, SQFlash 920 series PCIe SSD applies the LDPC with RAID ECC algorithm, which can detect and correct errors occur during read process, ensure data been read correctly, as well as protect data from corruption.

■ Wear Leveling

NAND flash devices can only undergo a limited number of program/erase cycles, and in most cases, the flash media are not used evenly. If some areas get updated more frequently than others, the lifetime of the device would be reduced significantly. Thus, Wear Leveling is applied to extend the lifespan of NAND Flash by evenly distributing write and erase cycles across the media.

SQFlash provides advanced Wear Leveling algorithm, which can efficiently spread out the flash usage through the whole flash media area. Moreover, by implementing both dynamic and static Wear Leveling algorithms, the life expectancy of the NAND flash is greatly improved.

■ Bad Block Management

Bad blocks are blocks that include one or more invalid bits, and their reliability is not guaranteed. Blocks that are identified and marked as bad by the manufacturer are referred to as “Initial Bad Blocks”. Bad blocks that are developed during the lifespan of the flash are named “Later Bad Blocks”. SQFlash implements an efficient bad block management algorithm to detect the factory-produced bad blocks and manages any bad blocks that appear with use. This practice further prevents data being stored into bad blocks and improves the data reliability.

■ Power Loss Protection

– Flush Manager

Power Loss Protection is a mechanism to prevent data loss during unexpected power failure. DRAM is a volatile memory and frequently used as temporary cache or buffer between the controller and the NAND flash to improve the SSD performance. However, one major concern of the DRAM is that it is not able to keep data during power failure. Accordingly, SQFlash SSD applies the Flush Manager technology, only when the data is fully committed to the NAND flash will the controller send acknowledgement (ACK) to the host. Such implementation can prevent false-positive performance and the risk of power cycling issues.

In addition, it is critical for a controller to shorten the time the in-flight data stays in the controller internal cache. Thus, SQFlash applies an algorithm to reduce the amount of data resides in the cache to provide a better performance. With Flush Manager, incoming data would only have a “pit stop” in the cache and then move to NAND flash directly. Also, the onboard DDR will be treated as an “organizer” to consolidate incoming data into groups before written into the flash to improve write amplification.

– Voltage Stabilizer (optional)

While the built-in voltage detector detects an unstable power input (< 11.4 V or > 12.6 V), the controller will issue a power failure interrupt and force a Flush CMD first. At the same time, the whole internal power supply will be switched to Voltage Stabilizer immediately to ensure stable power is supplied throughout the whole drive. This ensures the Flash IC and DDR IC will not operate with unstable power which could lead to data errors or bad data integrity.

■ TRIM

TRIM is a feature which helps improve the read/write performance and speed of solid-state drives (SSD). Unlike hard disk drives (HDD), SSDs are not able to overwrite existing data, so the available space gradually becomes smaller with each use. With the TRIM command, the operating system can inform the SSD which blocks of data are no longer in use and can be removed permanently. Thus, the SSD will perform the erase action, which prevents unused data from occupying blocks all the time.

SMART

SMART, an acronym for Self-Monitoring, Analysis and Reporting Technology, is an open standard that allows a hard disk drive to automatically detect its health and report potential failures. When a failure is recorded by SMART, users can choose to replace the drive to prevent unexpected outage or data loss. Moreover, SMART can inform users of impending failures while there is still time to perform proactive actions, such as copy data to another device.

Over-Provision

Over Provisioning refers to the inclusion of extra NAND capacity in a SSD, which is not visible and cannot be used by users. With Over Provisioning, the performance and IOPS (Input/Output Operations per Second) are improved by providing the controller additional space to manage P/E cycles, which enhances the reliability and endurance as well. Moreover, the write amplification of the SSD becomes lower when the controller writes data to the flash.

Thermal Throttling

Thermal Throttling function is for protecting the drive and reducing the possibility of read / write error due to overheat. The temperature is monitored by the thermal sensor. As the operating temperature continues to increase to threshold temperature, the Thermal Throttling mechanism is activated. At this time, the performance of the drive will be significantly decreased to avoid continuous heating. When the operating temperature falls below threshold temperature, the drive can resume to normal operation.

Advanced Device Security Features

- **Advanced Encryption Standard (AES)**

  An AES 256-bit encryption key is generated in the drive's security controller before the data gets stored on the NAND flash. When the controller or firmware fails, the data that is securely stored in the encryption key becomes inaccessible through the NAND flash.

- **OPAL 2.0 support**

  SQFlash 920 series supports standard OPAL 2.0 function for advance Self-Encryption Drive (SED) feature sets. Advantech provides also user friendly interface for setting disk / system bonding to prevent SSD be used in non-authorized platforms, which is called Flash Lock function.

- **Secure Erase Function**

  SQFlash 920 series supports standard NVMe command for secure erase function; when the SSD controller receive the secure erase command, the erase process will reset all blocks and erase all of the user data in the SSD.

- **Sanitize Fucntion**

  SQFlash 920 series default implement NVMe Sanitize Device Feature set, which supports the command set of Block Erase, Overwritten and Crypto Scramble. With the internal AES encryption support, the Crypto Scrambel process will start with resetting AES key. By doing so, existing data will be scrambled within 10ms and cannot be recovered anymore. Moreover, erase flag is set when erase function is triggered, which will ensure the whole erase process can be 100% completed. Even there's power interrupt, after power resume, erase operation will be resume right away as well.

■ Block Diagram

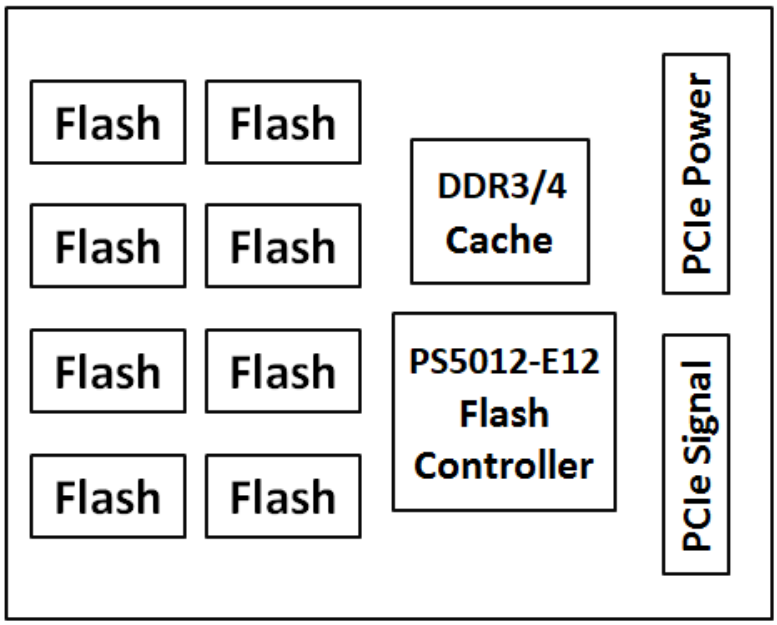

■ LBA value

Density (GB)	LBA
240	468,862,128
480	937,703,088
960	1,875,385,008
1920	3,750,748,848
3840	7,501,476,528
7680	15,002,931,888

5. Pin Assignment and Description

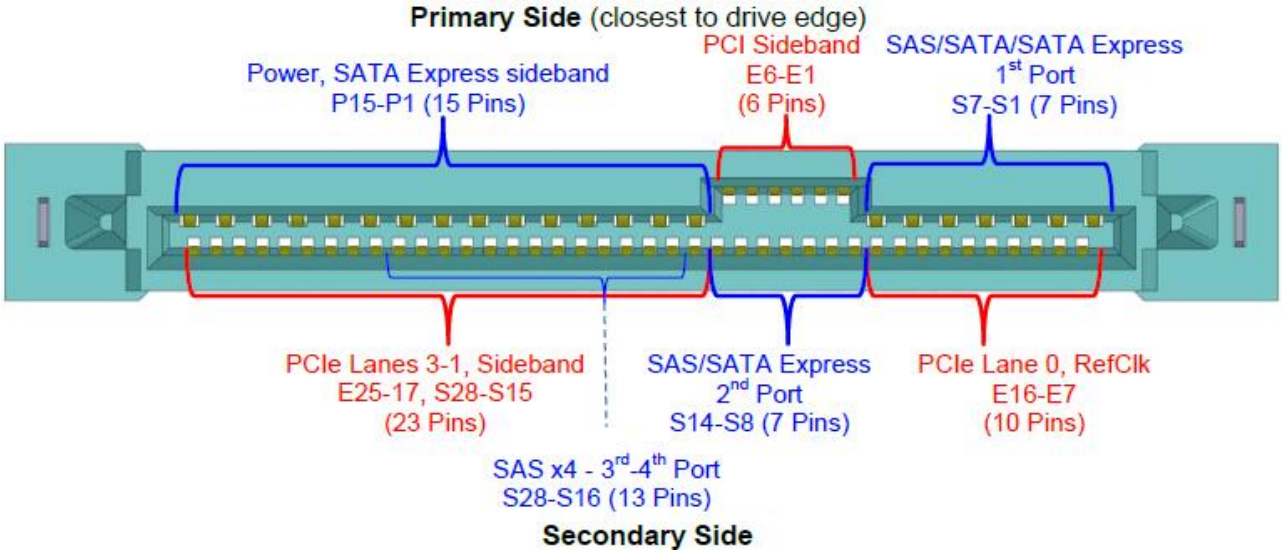

Pin Number	Name	Type	Description
Power Segment			
P1	WAKE#	Input	Signal for Link reactivation
P2	-	-	Outside scope of this specification
P3	CLKREQ#	Bi-Dir	Clock request
P4	IfDet#	Input	Interface Type Detect
P5	Ground	Ground	Ground
P6	Ground	Ground	Ground
P7	-	-	Outside scope of this specification
P8	-	-	Outside scope of this specification
P9	-	-	Outside scope of this specification
P10	PRSNT#	Input	Presence detect
P11	Activity	Input	
P12	Ground	Ground	Ground
P13	+12V Precharge	Power	+12V Precharge power for SFF-8639 module
P14	+12V	Power	+12V power for SFF-8639 module
P15	+12V	Power	+12V power for SFF-8639 module
Signal Segment (SATA / SATA Express / SAS)			
S1	Ground	Ground	Ground
S2	-	-	Outside scope of this specification
S3	-	-	Outside scope of this specification
S4	Ground	Ground	Ground
S5	-	-	Outside scope of this specification
S6	-	-	Outside scope of this specification
S7	Ground	Ground	Ground
S8	Ground	Ground	Ground
S9	-	-	Outside scope of this specification
S10	-	-	Outside scope of this specification
S11	Ground	Ground	Ground
S12	-	-	Outside scope of this specification
S13	-	-	Outside scope of this specification
S14	Ground	Ground	Ground
S15	Reserved	-	Reserved

S16	Ground	Ground	Ground
S17	PETp1	Diff-Pair	Transmitter differential pair, Lane 1
S18	PETn1	Diff-Pair	Transmitter differential pair, Lane 1
S19	Ground	Ground	Ground
S20	PERn1	Diff-Pair	Receiver differential pair, Lane 1
S21	PERp1	Diff-Pair	Receiver differential pair, Lane 1
S22	Ground	Ground	Ground
S23	PETp2	Diff-Pair	Transmitter differential pair, Lane 2
S24	PETn2	Diff-Pair	Transmitter differential pair, Lane 2
S25	Ground	Ground	Ground
S26	PERn2	Diff-Pair	Receiver differential pair, Lane 2
S27	PERp2	Diff-Pair	Receiver differential pair, Lane 2
S28	Ground	Ground	Ground
Signal Segment (PCIe)			
E1	REFCLKB+	Diff-Pair	Reference clock (differential pair) for second X2 port
E2	REFCLKB-	Diff-Pair	Reference clock (differential pair) for second X2 port
E3	+3.3 Vaux	Power	3.3 V auxiliary power
E4	PERSTB#	Output	Fundamental reset for second X2 port
E5	PERST#	Output	Fundamental reset (if dual-port enabled, first X2 port)
E6	Reserved	-	Reserved
E7	REFCLK+	Diff-Pair	Reference clock (if dual-port enabled, first X2 port)
E8	REFCLK-	Diff-Pair	Reference clock (if dual-port enabled, first X2 port)
E9	Ground	Ground	Ground
E10	PETp0	Diff-Pair	Transmitter differential pair, Lane 0
E11	PETn0	Diff-Pair	Transmitter differential pair, Lane 0
E12	Ground	Ground	Ground
E13	PERn0	Diff-Pair	Receiver differential pair, Lane 0
E14	PERp0	Diff-Pair	Receiver differential pair, Lane 0
E15	Ground	Ground	Ground
E16	Reserved	-	Reserved
E17	PETp3	Diff-Pair	Transmitter differential pair, Lane 3
E18	PETn3	Diff-Pair	Transmitter differential pair, Lane 3
E19	Ground	Ground	Ground
E20	PERn3	Diff-Pair	Receiver differential pair, Lane 3
E21	PERp3	Diff-Pair	Receiver differential pair, Lane 3
E22	Ground	Ground	Ground
E23	SMCLK	Bi-Dir	SMBus (System Management Bus) clock
E24	SMDAT	Bi-Dir	SMBus (System Management Bus) data
E25	DualPortEn#	Output	Dual-port Enable

6. NVMe Command List

■ Admin commands

Opcode	Command Description
00h	Delete I/O Submission Queue
01h	Create I/O Submission Queue
02h	Get Log Page
04h	Delete I/O Completion Queue
05h	Create I/O Completion Queue
06h	Identify
08h	Abort
09h	Set Features
0Ah	Get Features
0Ch	Asynchronous Event Request
10h	Firmware Activate
11h	Firmware Image Download
I/O Command Set Specific	
80h	Format NVM
81h	Security Send
82h	Security Receive
83h-BFh	I/O Command Set specific
Vendor Specific	
C0h-FFh	Vendor specific

■ NVM commands

Opcode	Command Description
00h	Flush
01h	Write
02h	Read
04h	Write Uncorrectable
05h	Compare
08h	Write Zeroes
09h	Dataset Management
0Dh	Reservation Register
0Eh	Reservation Report
11h	Reservation Acquire
15h	Reservation Release
Vendor Specific	
80h – FFh	Vendor specific

7. Identify Device Data

The Identity Device Data enables Host to receive parameter information from the device. The parameter words in the buffer have the arrangement and meanings defined in below table. All reserve bits or words are zero

■ Identify Controller Data Structure

Bytes	Description
Controller Capabilities and Features	
01:00	PCI Vendor ID (VID)
03:02	PCI Subsystem Vendor ID (SSVID)
23:04	Serial Number (SN)
63:24	Model Number (MN)
71:64	Firmware Revision (FR)
72	Recommended Arbitration Burst (RAB)
75:73	IEEE OUI Identifier (IEEE)
76	Controller Multi-Path I/O and Namespace Sharing Capabilities (CMIC)
77	Maximum Data Transfer Size (MDTS)
255:80	Reserved
Admin Command Set Attributes & Optional Controller Capabilities	
257:256	Optional Admin Command Support (OACS)
258	Abort Command Limit (ACL)
259	Asynchronous Event Request Limit (AERL)
260	Firmware Updates (FRMW)
261	Log Page Attributes (LPA)
262	Error Log Page Entries (ELPE)
263	Number of Power States Support (NPSS)
264	Admin Vendor Specific Command Configuration (AVSCC)
265	Autonomous Power State Transition Attributes (APSTA)
511:266	Reserved
NVM Command Set Attributes	
512	Submission Queue Entry Size (SQES)
513	Completion Queue Entry Size (CQES)
515:514	Reserved
519:516	Number of Namespaces (NN)
521:520	Optional NVM Command Support (ONCS)
523:522	Fused Operation Support (FUSES)
524	Format NVM Attributes (FNA)
525	Volatile Write Cache (VWC)
527:526	Atomic Write Unit Normal (AWUN)
529:528	Atomic Write Unit Power Fail (AWUPF)
530	NVM Vendor Specific Command Configuration (NVSCC)
531	Reserved
533:532	Atomic Compare & Write Unit (ACWU)
535:534	Reserved
539:536	SGL Support (SGLS)
703:540	Reserved

■ Identify Namespace Data Structure & NVM Command Set Specific

Bytes	Description
7:0	Namespace Size (NSZE)
15:8	Namespace Capacity (NCAP)
23:16	Namespace Utilization (NUSE)
24	Namespace Features (NSFEAT)
25	Number of LBA Formats (NLBAF)
26	Formatted LBA Size (FLBAS)
27	Metadata Capabilities (MC)
28	End-to-end Data Protection Capabilities (DPC)
29	End-to-end Data Protection Type Settings (DPS)
30	Namespace Multi-path I/O and Namespace Sharing Capabilities (NMIC)
31	Reservation Capabilities (RESCAP)
119:32	Reserved
127:120	IEEE Extended Unique Identifier (EUI64)
131:128	LBA Format 0 Support (LBAF0)
135:132	LBA Format 1 Support (LBAF1)
139:136	LBA Format 2 Support (LBAF2)
143:140	LBA Format 3 Support (LBAF3)
147:144	LBA Format 4 Support (LBAF4)
151:148	LBA Format 5 Support (LBAF5)
155:152	LBA Format 6 Support (LBAF6)
159:156	LBA Format 7 Support (LBAF7)
163:160	LBA Format 8 Support (LBAF8)
167:164	LBA Format 9 Support (LBAF9)
171:168	LBA Format 10 Support (LBAF10)
175:172	LBA Format 11 Support (LBAF11)
179:176	LBA Format 12 Support (LBAF12)
183:180	LBA Format 13 Support (LBAF13)
187:184	LBA Format 14 Support (LBAF14)
191:188	LBA Format 15 Support (LBAF15)
383:192	Reserved
4095:384	Vendor Specific (VS)

■ List of Device Identification for Each Capacity

Capacity (GB)	Byte[7:0]: Namespace Size (NSZE)
240	1BF244B0h
480	37E436B0h
960	6FC81AB0h
1920	DF8FE2B0h
3840	1BF1F72B0h
7680	37E3E92B0h

8. System Power Consumption

■ Supply Voltage

Parameter	Rating
Operating Voltage	12V +/- 5%

■ Power Consumption

(W)		Read	Write	Idle
3D TLC (BiCS3)	240 GB	5.2	3.2	1.9
	480 GB	5.8	3.7	1.9
	960 GB	6.4	5.6	2.0
	1920 GB	8.0	6.1	2.0
	3840 GB	8.7	6.6	2.2
	7680 GB	9.0	6.9	2.2

9. Physical Dimension

2.5” U.2 SSD (Unit: mm)

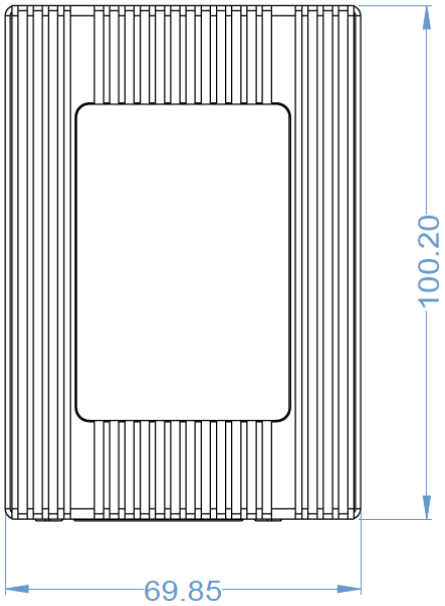

(Top View)

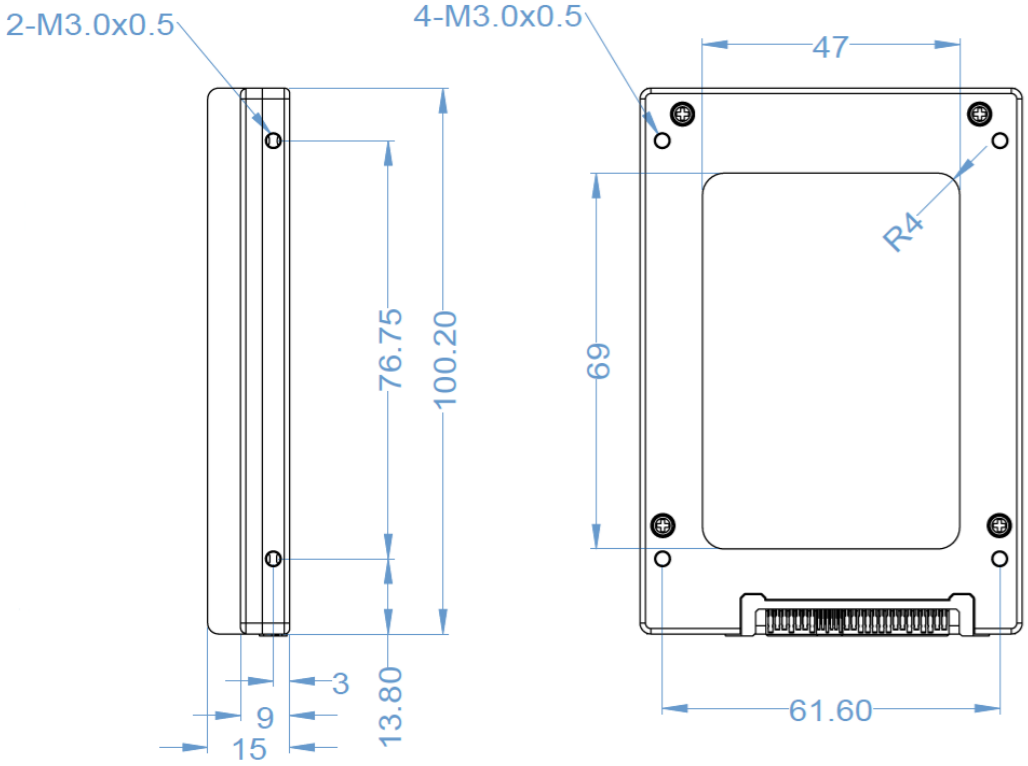

(Side View) **(Bottom View)**

Appendix: Part Number Table

Product	Advantech PN
SQF 920 NVMe U.2 SSD (OPAL) 240G 3D TLC (BiCS3) (0~70°C)	SQF-C25V4-240G-ECC
SQF 920 NVMe U.2 SSD (OPAL) 480G 3D TLC (BiCS3) (0~70°C)	SQF-C25V8-480G-ECC
SQF 920 NVMe U.2 SSD (OPAL) 960G 3D TLC (BiCS3) (0~70°C)	SQF-C25V8-960G-ECC
SQF 920 NVMe U.2 SSD (OPAL) 1920G 3D TLC (BiCS3) (0~70°C)	SQF-C25VF-1K9G-ECC
SQF 920 NVMe U.2 SSD (OPAL) 3840G 3D TLC (BiCS3) (0~70°C)	SQF-C25VF-3K8G-ECC
SQF 920 NVMe U.2 SSD (OPAL) 7680G 3D TLC (BiCS3) (0~70°C)	SQF-C25VF-7K6G-ECC
SQF 920 NVMe U.2 SSD (OPAL) 240G 3D TLC (BiCS3) (-40~85°C)	SQF-C25V4-240G-ECE
SQF 920 NVMe U.2 SSD (OPAL) 480G 3D TLC (BiCS3) (-40~85°C)	SQF-C25V8-480G-ECE
SQF 920 NVMe U.2 SSD (OPAL) 960G 3D TLC (BiCS3) (-40~85°C)	SQF-C25V8-960G-ECE
SQF 920 NVMe U.2 SSD (OPAL) 1920G 3D TLC (BiCS3) (-40~85°C)	SQF-C25VF-1K9G-ECE
SQF 920 NVMe U.2 SSD (OPAL) 3840G 3D TLC (BiCS3) (-40~85°C)	SQF-C25VF-3K8G-ECE
SQF 920 NVMe U.2 SSD (OPAL) 7680G 3D TLC (BiCS4) (-40~85°C)	SQF-C25VF-7K6G-ECE