MIO-2361

Intel® Atom™ E3900 series/ Pentium® N4200/ Celeron® N3350 Pico-ITX SBC

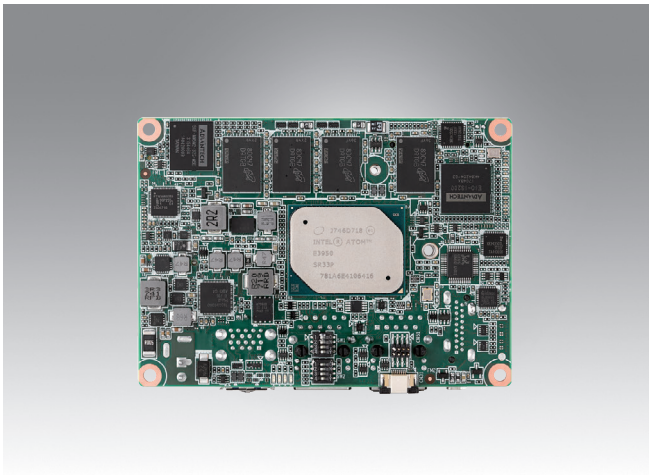

Features

- Intel® Atom™ E3900 series/ Pentium N4200
- Onboard LPDDR4-2400 up to 8GB, eMMC up to 64GB
- LVDS 48-bit, HDMI up to 4K, Dual Displays
- M.2 E-key 2230, F/S mPCIe, opt. mSATA
- Dual GbE, USB3.0, 2 x RS-232/422/485, 12/24V input
- iManager3.0 & Software APIs, WISE-PaaS/DeviceOn

Software APIs:



ubuntu yocto PROJECT Windows 10 iManager WISE-DeviceOn CE FC

Specifications

Platform	Processor	Atom E3950	Atom E3940	Atom E3930	Pentium N4200	Celeron N3350
	Max. Frequency	2.0 GHz	1.80 GHz	1.80 GHz	2.50 GHz	2.40 GHz
	Base Frequency	1.60 GHz	1.60 GHz	1.30 GHz	1.10 GHz	1.10 GHz
	Core/Tread	4/4	4/4	2/2	4/4	2/2
	LLC	2 MB	2 MB	2 MB	2 MB	2 MB
	CPU TDP	12W	9W	6W	6W	6W
	Chipset	Intel Atom SoC processor integrated				
	BIOS	AMI EFI 64 Mbit				
Memory	Technology	LPDDR4-2400MT/s				
	Max. Capacity	Up to 8GB				
	Channel/Socket	Dual Channel/ Onboard LPDDR4				
Graphics	Controller	Intel® Atom SoC integrated				
	Burst Frequency	650 MHz	600 MHz	550 MHz	750 MHz	650 MHz
	Graphics Memory	2 GB	2 GB	2 GB	2 GB	2 GB
	3D/HW Acceleration	3D: DX12, OGL4.3, OGL ES3.0, OCL 1.2 HW Decode: H.265, H.264, MVC, VP8, VP9, MPEG2, VC-1, WMV9 HW Encode: H.265, H.264, MVC, VP8				
Display I/F	LCD	LVDS: Dual-Channel 48-bit, up to 1920 x 1200				
	HDMI/DP	HDMI 1.4b: up to 3840 x 2160 at 30Hz				
	Multiple Display	Dual display, HDMI+48-bit LVDS				
Ethernet	Controller	LAN1: Intel i210AT/IT LAN2: Intel i210AT/IT (*i210IT is for EW-series) *Support PXE boot under UEFI				
	Speed	10/100/1000 Mbps				
External I/O	Ethernet	2 x RJ-45				
	VGA/HDMI/DP	0/1/0				
	USB3.0/USB2.0	2/0				
	Power DC-Jack	Lockable DC-Jack *(Optional)				
Internal I/O	SATA	1, up to 6Gb/s (600MB/s)				
	USB2.0	2				
	Serial Bus	SMBus (default), I2C* (optional)				
	COM Port	2 x RS-232/422/485				
	GPIO	16-bit general purpose input output I/O				
	Audio	Realtek ALC-888S, Line-in/Line-out/MIC				
	Invertor	1A@12V, 1A@5V				
	SATA Power	Co-Function with Invertor				
	Fan	12V, 1A (2-wire)				
	Front Panel Control	Power Button, Reset Button, Buzzer, SATA Indicator, 5V/3.3V Power Indicator, CaseOpen				
Board Feature	Watchdog Timer	65536 level, 0~65535 sec				
	TPM	2.0 *(Optional)				
	iManager 3.0	Y (Software APIs for Power Monitor, CPU Temp., Smart Fan, GPIO, WDT, SMBus, I2C, Backlight & Brightness Control)				
Storage	eMMC	32GB, up to 64GB* (optional)				
Expansion	M.2	E-Key 2230 (PCIe x1, USB2.0) Only for Wireless LAN module				
	mPCIe/mSATA	F/S mPCIe, mSATA optional				
Power	Supply Voltage	Vin: 12V or 24V +/- 10%; RTC Battery: Lithium 3V/ 210mAH				
	Connector	ATX 2-pin(180D), optional: DC-Jack				
	Power Management	AT, ATX				
	Max. Consumption	E3950: 26.27 W (12V) E3950: 26.51 W (24V)	E3940: 15.22 W (12V) E3940: 15.86 W (24V)	E3930: 11.68 W (12V) E3930: 11.68 W (24V)	N4200: 19.96 W (12V) N4200: 19.92 W (24V)	N3350: 14.89 W (12V) N3350: 15.93 W (24V)
	Idle Consumption	E3950: 8.59 W (12V) E3950: 8.81 W (24V)	E3940: 6.28W (12V) E3940: 6.57W (24V)	E3930: 5.97W (12V) E3930: 6.23W (24V)	N4200: 6.53W (12V) N4200: 7.17W (24V)	N3350: 6.51W (12V) N3350: 7.45W (24V)
Environment	Temperature	Operating: Standard: 0 ~ 60 °C (32 ~ 140 °F), Extend: -40 ~ 85 °C (-40 ~ 185 °F) Storage: -40 ~ 85 °C (-40 ~ 185 °F)				
	Humidity	Storage: -40 ~ 85 °C (-40 ~ 185 °F) Storage: 60 °C @ 95%relative humidity, non-condensing				
	Vibration Resistance	3.5Grms				
Certification	EMC	CE, FCC Class B				
Mechanical	Dimensions	100 x 72 mm (3.9" x 2.8")				

*Note: Support by request

All product specifications are subject to change without notice.

Last updated: 23-Nov-2026

Block Diagram

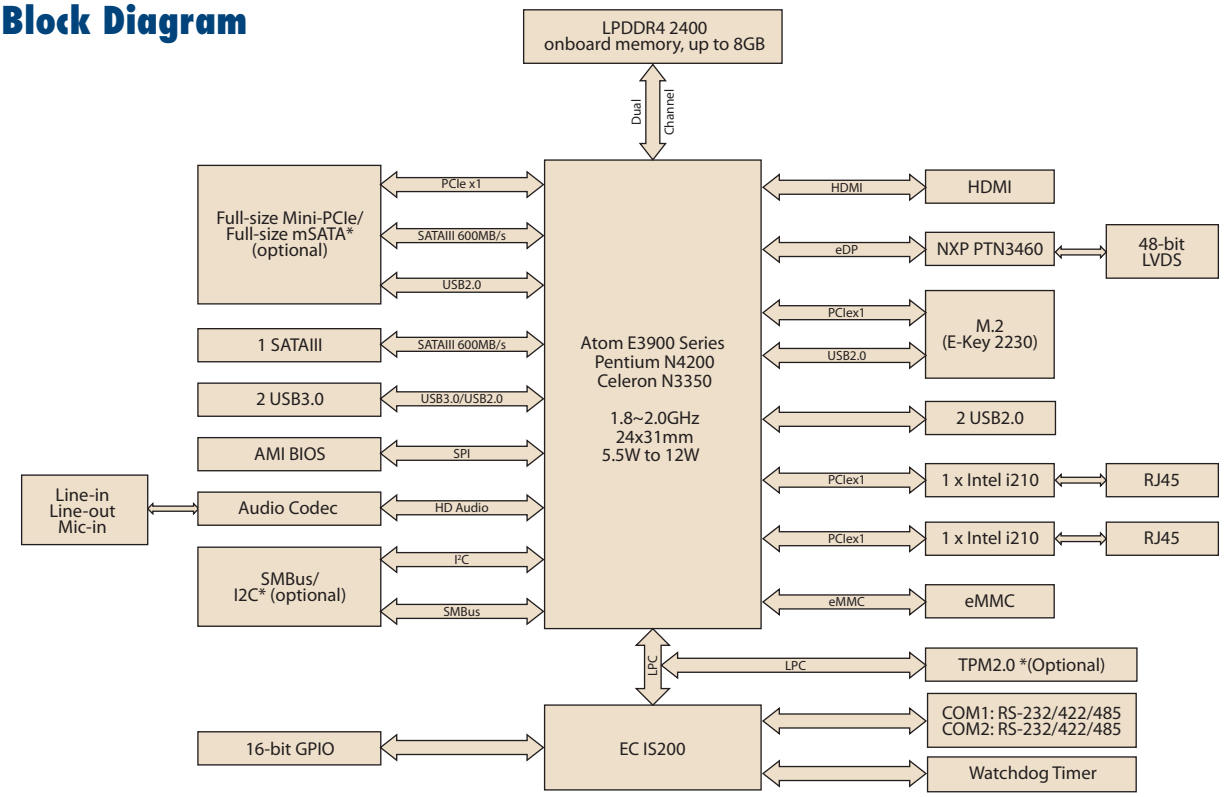

Ordering Information

Part Number	CPU	Max. frequency	Core	Memory	eMMC	Audio	mPCIe/mSATA	Thermal solution	Operating Temp
MIO-2361EW-S1A2	Atom E3930	1.80 GHz	2	4G	32G	Y	Y/N	Passive	-40 ~ 85° C
MIO-2361EW-S6A2	Atom E3940	1.80 GHz	4	4G	32G	Y	Y/N	Passive	-40 ~ 85° C
MIO-2361EW-S7A2	Atom E3950	2.0 GHz	4	4G	32G	Y	Y/N	Passive	-40 ~ 85° C
MIO-2361EWS-S1A2	Atom E3930	1.80 GHz	2	4G	32G	Y	N/Y	Passive	-40 ~ 85° C
MIO-2361EWS-S6A2	Atom E3940	1.80 GHz	4	4G	32G	Y	N/Y	Passive	-40 ~ 85° C
MIO-2361EWS-S7A2	Atom E3950	2.0 GHz	4	4G	32G	Y	N/Y	Passive	-40 ~ 85° C
MIO-2361N-S1A2	Celeron N3350	2.4 GHz	2	4G	32G	Y	Y/N	Passive	0 ~ 60° C
MIO-2361N-S2A2	Pentium N4200	2.5 GHz	4	4G	32G	Y	Y/N	Passive	0 ~ 60° C

*Default BIOS supports 64 bits OS installation, BIOS for 32 bits OS installation is supported by project.

Packing List

Part No.	Description	Quantity
	MIO-2361 SBC	1
	Startup Manual	1
1700006291	SATA cable 30cm	1
1700027546-01	LVDS backlight power/control + SATA power line	1
1701200220	RS-232 x 2 ports 2.0mm pitch 22cm	1
1700002172	USB cable 2.0 mm pitch USB-A(F) 17 cm	1
1700019705	AT power cable 12 cm	1
1960087918T021	29mm heatsink for E3900 series	1
1960090850T031	24mm heatsink for N4200/N3350	1

Optional Accessories

Part No.	Description
1970006449T001	MIO-2361 Heat spreader for E3900 series
1970004733N011	MIO-2361 Heat spreader for N4200/N3350
IDK-1110WP-50XGA1E	10.1" LED PANEL 500N
IDK-1115P-50XGA1E	15" LED PANEL 500N

Rear I/O View



Embedded OS/API

Embedded OS/API	Part No.	Description
Windows 10	20706WX9ES0026	64-bit (UEFI Mode Only)
Ubuntu 20.04	20706U20DS0011	Ubuntu Desktop 20.04 LTS 64-bit Image & License Sticker for MIO-2361
Yocto	Support by Request	Yocto BSP and Test Image
Software API	Website Download	SUSI v4.0

Reliable Embedded BIOS Solutions

Custom BIOS services with long-term support

Advantech's high-quality embedded BIOS solutions deliver rapid execution and feature expert BIOS team support. These solutions feature multi-functional designs that ensure security and enable power/boot management. Advantech further provides 10+ years of BIOS version management, internal management, and longevity support for both hardware and BIOS — enhancing application efficiency, diversifying functionality, and optimizing performance.

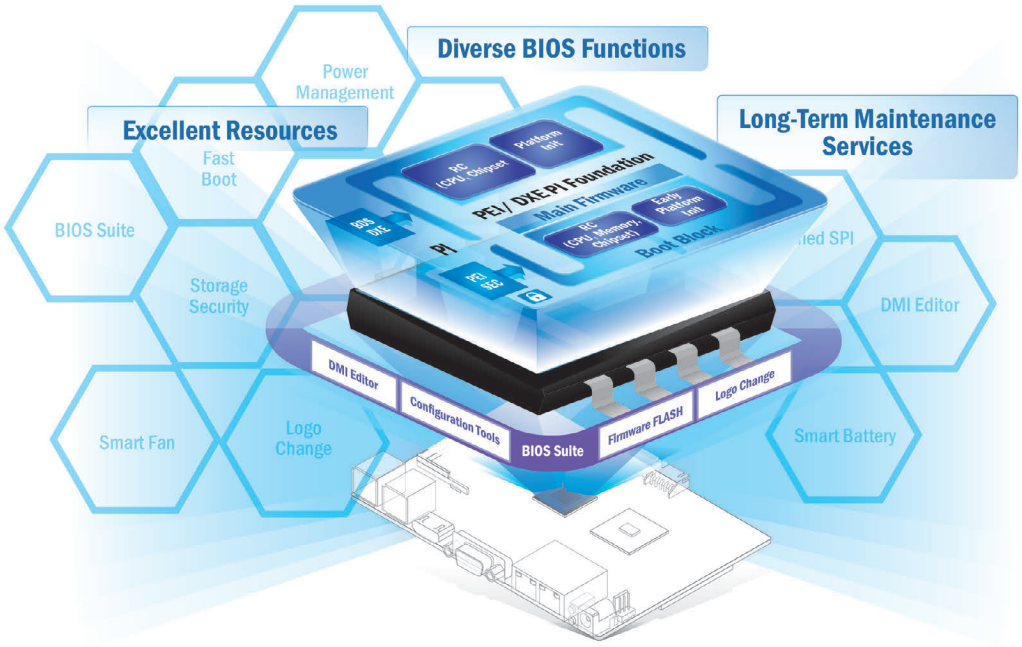

Embedded BIOS Solution Advantages

Sufficient Sources

- Strong partnership with BIOS vendors
- 50+ engineers with extensive industrial BIOS experience

Diverse BIOS Functions

- Multi-layer security
- 3 second fast boot
- Power management
- BIOS suite utility

Long-Term Maintenance Services

- Platform longevity support
- 10-year BIOS version control
- BIOS remote backup

Value-Added Customization Process

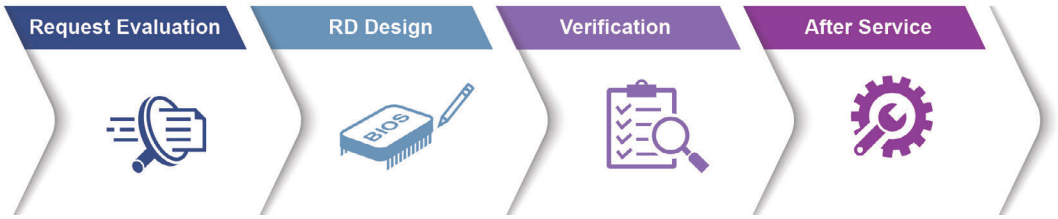

Embedded Linux Support and Design-in Services

Hardware Certified Ubuntu and Yocto with Eco Partner Services

Linux is the most popular embedded OS for transportation, outdoor services, factory automation, and mission critical applications. Its open source and kernel reliability features ease security updates, and make it particularly adaptable to new AI and Edge computing technology. Advantech has cooperated with Canonical and other software partners to provide hardware certified Ubuntu image and Yocto BSP as Linux offerings. The Advantech, Embedded Linux, and Android Alliance (ELAA) delivers local software services and consultation.



Features

Certified OS and BSP

- Platform compatibility tests
- Preloaded functional driver and software stacks

Licensed Services

- License authorized Canonical delivers 10-years of bug fixes and security updates
- In-house bundled service

Numerous AI and Edge Resources

- Containerized technology for service provision and deployment
- AI resources from Caffe, TensorFlow, and mxnet

Local Partner Alliance

- Embedded Linux and Android Alliance (ELAA)

Edge AI Suite

AI development for diverse application at the Edge

Increasing demand for AI inference/analytic capabilities at the Edge make AI training models, software development environments, and hardware configuration key factors in successful solution deployment. Advantech's Edge AI Suite helps users build AI demo devices quickly and choose optimal hardware solutions easily.



5x Performance Boost	All-in-one Installation	One Click AI Experience	Plug-and-play Environment	Discover Cost-effective Hardware
• Integrated Intel® OpenVINO™ technology • Boost AI using Advantech hardware	• Build AI environment in under 5 minutes • Ready-to-use configuration	• User friendly configuration guidance • One-click Benchmark acquisition	• Easy access to 100+ AI inference extensions • Software development package available	• Diverse CPU/RAM options • Find hardware solutions for AI development

WISE-DeviceOn

Massive IoT Device Management Utility

IoT deployment and management typically involves numerous disparate devices installed on multiple sites. These devices require effective monitoring, managing, and tracking. Advantech's easy-to-use WISE-DeviceOn interface enables users to remotely monitor device health, troubleshoot problems, and send software/firmware updates over-the-air (OTA). In sum, DeviceOn empowers quick real-time responsiveness to emerging problems.



Features

Comprehensive Management	Remote Access	Efficient Operations
• Devices status • Peripherals/firmware • Open for extension	• Real-time monitoring • Remote controls • Troubleshooting	• Zero-touch on-boarding • OTA updates • Batch control

Product Highlights



SOM-6883
High-performance 11th Gen Intel® COMe Type 6 Module



MIO-5375
Compact 11th Gen Intel® Outdoor Focused 3.5" SBC



EPC-B5587
10th Gen Intel® Xeon® based Edge server



EPC-R3220
Arm based IoT Edge Gateway