MIO-5350

Intel® Pentium N4200 Celeron N3350 & Atom™ E3950/E3940/E3930, 3.5" SBC w/ MIOe

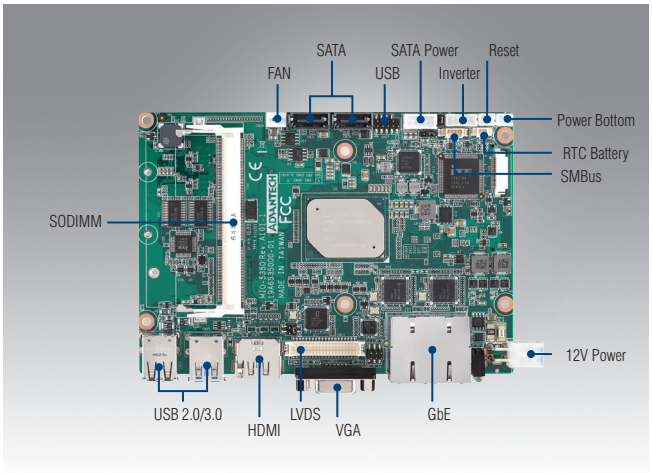

Features

- Intel® Pentium N4200 & Celeron N3350, Atom™E3950, E3940, E3930,DDR3L 1866MHz, up to 8GB
- Triple display: VGA+LVDS/eDP*+ HDMI/DP*
- 2 Intel i210 GbE, rich I/O: 4COM, 2 SATA, 2 USB 3.0, SMBus/I²C, GPIO
- 3 Expansions: M.2 E-Key, full-size mSATA, MIOe
- Supports iManager & Software APIs, WISE-DeviceOn

Software APIs: GPIO, H/W Monitor, Brightness, Watchdog, Backlight On/Off, SMBus, CPU Speed, System Throttling

Utilities: Monitoring

Windows Embedded | iManager | WISE-PaaS/RMM | CE FCC

Specifications

Processor System	CPU	Intel Pentium 4200	Intel Celeron N3350	Intel Atom E3950	Intel Atom E3940	Intel Atom E3930
	Base Frequency	1.1 (Quad-Core)	1.1 (Dual-Core)	1.6 (Quad-Core)	1.6 (Quad-Core)	1.3 (Dual-Core)
	Burst Frequency	2.5	2.4	2	1.8	1.8
	L2 Cache	2	2	2	2	2
	BIOS	AMI UEFI BIOS at 64 Mb				
Memory	Technology	DDR3L 1866MHz				
	Max. Capacity	8 GB				
	Socket	1 x 204-pin SODIMM				
Display	Controller	Intel Gen9 Graphic engine				
	Graphic Features	DirectX 12.0, OpenGL 4.3, OpenCL 2.0 HW Decode: H.264, MPEG2, VC-1, WMV9, H.265, VP8, JPEG/MJPEG				
	VGA	Maximum Resolution up to 1920 x 1200				
	LVDS	48 bit LVDS up to 1.4b (3840 x 2160 @ 30Hz) Supports 3.3/5/12V for VDD power, 5/12V for inverter				
	eDP*	v1.4 4096 x 2160 @ 60Hz				
	HDMI / DP*	HDMI 3840 x 2160 @ 30Hz/ DP1.2a (4096 x 2160 @ 60Hz)				
	Mulit-Display	VGA, HDMI/DP*, LVDS/eDP*				
Ethernet	Speed	10/100/1000Mbps				
	Controller	Intel i210				
	Connector	2 RJ45				
Audio	Codec	Realtek ALC888S, High Definition Audio (HD), Line-in, Line out, Mic-in				
	Amplifier*	Optional via MIOe				
WatchDog Timer		Output System reset, Programmable counter from 1 ~ 255 minutes/ seconds				
Storage	SATA	2 (2nd SATA is by request), up to 6 Gb/s				
	mSATA	1 x Full-size				
Rear I/O	Ethernet	2 (10/100/1000Mbps)				
	VGA	1				
	HDMI / DisplayPort*	1				
	USB 2.0	2				
	USB 3.0	2				
	LED	Power, HDD				
	DC Jack*	1				
Internal I/O	Serial	2 x RS-232 from COM1/2, 2 x RS-232/422/485 from COM3/4 with auto flow control (ESD protection: air gap ±15kV, contact ±8kV)				
	USB 2.0	2				
	I²C	1 (Shared with SMBus pin)				
	SMBus	1				
	GPIO	8-bit (5V tolerance)				
Security	TPM2.0*	Support by request				
Expansion	mSATA	Full size mSATA (SATA Gen.3, USB2.0)				
	M.2 E-Key	1x E-Key 2230 (PCIe x1, USB2.0)				
	MIOe	SMBus, 3 x USB2.0, LPC, 1 x PCIe x1, line out, DisplayPort*, +5 Vsb/+12 Vsb power, Power On, Rest				
Power	Power Type	Single 12V DC power input				
	Power Supply Voltage	12V ± 10%				
	Power Consumption (Typical)	N4200: 0.4A @ 12V (4.80W) N3350: 0.4A @ 12V (4.80W)				
	Power Consumption (Max, test in HCT)	N4200: 1.26A @ 12V (15.12W) N3350: 1.29 @ 12V (15.48W)				
	Power Management	ACPI				
	Battery	Lithium 3 V / 210 mAH				
Environment	Operating	Operating Standard: 0 ~ 60 °C (32 ~ 140 °F) with 0.7m/s airflow Operating Extend: -40 ~ 85 °C (-40 ~ 185 °F) with 0.7m/s airflow Storage: -40 ~ 85 °C (-40 ~ 185 °F)				
	Operating humidity	40 °C @ 95% RH Non-Condensing				
Physical Characteristics	Dimensions (L x W)	146 x 102 mm (5.7" x 4"), same as 3.5"				
	Weight	0.5kg (1.1lb), weight of total package				
	Height	Top Side: 19 mm; Bottom Side: 6.8 mm; PCB: 1.6 mm				

* This specification is supported by request

All product specifications are subject to change without notice.

Last updated: 23-Nov-2026

Block Diagram

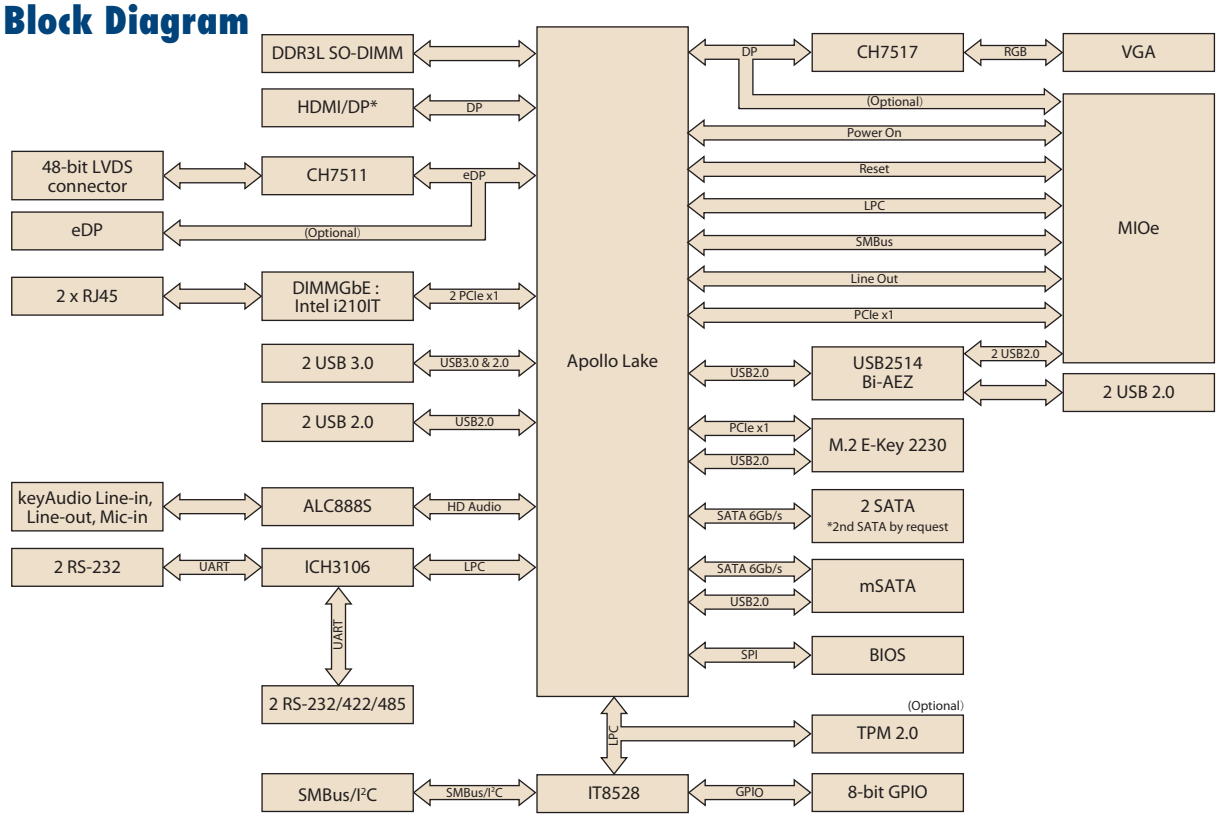

Ordering Information

Part No.	CPU	L2 Cache	Memory	LVDS/ eDP*	VGA	HDMI/ DP*	GbE	Audio	RS-232/ 422/485	RS-232	USB 3.0	USB 2.0	SATA III	Msata	MIOe	Power Connector	Thermal solution	Operating Temp
MIO-5350N-S2A2	Intel Pentium N4200	2MB	SODIMM	48-bit	1	1/0	2	Yes	2	2	2	4	1	Full-size	Yes	2x2pin	Passive	0~60°C
MIO-5350N-S1A2	Intel Celeron N3350	2MB	SODIMM	48Bit	1	1/0	2	Yes	2	2	2	4	1	Full-size	Yes	2x2pin	Passive	0~60°C
MIO-5350EW-S7A2	Intel Atom E3950	2MB	SODIMM	48-bit	1	1/0	2	Yes	2	2	2	4	1	Full-size	Yes	2x2pin	Passive	-40~85°C
MIO-5350EW-S6A2	Intel Atom E3940	2MB	SODIMM	48-bit	1	1/0	2	Yes	2	2	2	4	1	Full-size	Yes	2x2pin	Passive	-40~85°C
MIO-5350EW-S3A2	Intel Atom E3930	2MB	SODIMM	48-bit	1	1/0	2	Yes	2	2	2	4	1	Full-size	Yes	2x2pin	Passive	-40~85°C

Note: passive=fanless

Packing List

Part No.	Description	Quantity
	MIO-5350 SBC	1
2006535000	Startup Manual	1
1960078474T021	MIO-5350 Heatink for N3350/ N4200	1
1970004560T011	MIO-5350 Heatsink for E39XX series	1
1700006291	M Cable SATA 7P/SATA 7P 30cm C=R 180/90	1
1700018785	SATA 35cm power cable	1
1701200220	COM RS-232 Cable 2*10P-2.0/D-SUB 9P (M)*2 22CM	2
1700019584	Audio Cable 2*5P-2.0/JACK*3 20cm	1
	mini Jumper pack	1

Optional Accessories

Part No.	Description
96PSA-A60W12R1-3	ADP A/D 100-240V 60W 12V C14 DC PLUG 90°
1700021335-41	Adapter cable 20cm (DC Jack to ATX)
1703100264	Internal 1 port USB cable 22.5cm
1960084261N031	MIO-5350 Heatspreader for N3350/ N4200
1960084261N021	MIO-5350 Heatspreader for E39XX

Embedded OS/API

Embedded OS/API	Part No.	Description
Windows 10	20706WX9ES0127	Win 10 IoT Ent 2019 LTSC Entry
	20706WX9HS0113	Win 10 IoT Ent 2019 LTSC High
	20706WX9VS0117	Win 10 IoT Ent 2019 LTSC Value
Linux		Ubuntu 14.04
VxWorks		6.9.3.3
Android		Kit Kat 4.4
Software API		iManager 2.0

Rear I/O View

