MIO-5377

12th Gen. Intel® Core™ Processor (Code Name: Alder Lake-P) 3.5" SBC with USB4 for MXM GPU

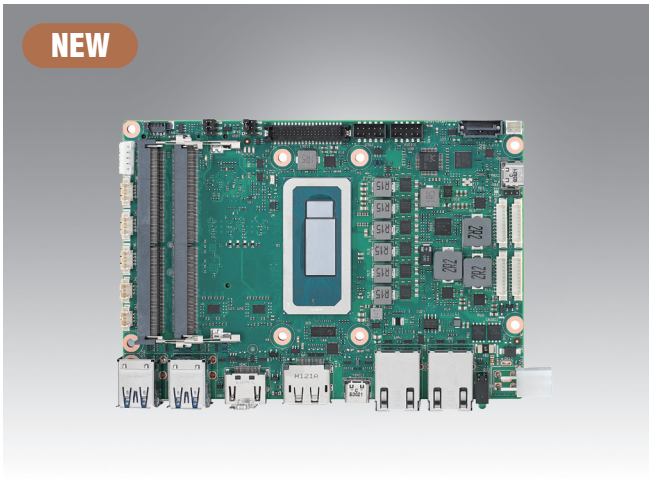

Windows 10 Ubuntu DeviceOn iManager CE FC

Features

- 12th Gen. Intel® Core™ Processor up to 12 Cores, TDP 28/15W
- Dual Channel DDR5-4800 up to 64GB
- 4 simultaneous displays: LVDS/HDMI/DP/USB-C Alt. DP
- 2x LAN, 8x USB (incl. 1x USB4), 4x UART, 2x CANBus, 3x I2C
- 3 Expansions: M.2 E-Key, B-Key, M-Key (support NVMe)
- Supports Windows 11 LTSC & Ubuntu 22.04 LTS, embedded software APIs, DeviceOn

Software APIs: GPIO, SMBus/I²C, Watch Dog Timer, Backlight On/Off, Brightness, CAN bus

Utilities: Hardware Monitor, System Throttling, Thermal Protection, Smart Fan, Data Security, System Info

Specifications

Platform	Processor	i7-1270PE	i5-1250PE	i7-1265UE	i5-1245UE	i3-1215UE
	Max. Frequency	4.5GHz	4.40 GHz	4.7GHz	4.4GHz	4.4GHz
	Base Frequency	1.8GHz	1.7 GHz	1.7GHz	1.5GHz	1.2GHz
	Core/Thread	4P+8E/16T	4P+8E/ 16T	2P+8E/12T	2P+8E/12T	2P+4E/8T
	LLC	18MB	12MB	12MB	12MB	10MB
	CPU TDP	28W	28W	15W	15W	15W
	Chipset	On-package Intel 600 Series Chipset				
	BIOS	AMI EFI 256Mbit				
Memory	Technology	DDR5-4800				
	Max. Capacity	Up to 64GB				
	Channel/Socket	Dual Channels / 2 Sockets				
Graphics	Controller	Intel® Iris® Xe Graphics				
	Max. Frequency	1.35GHz	1.30 GHz	1.25GHz	1.2GHz	1.1GHz
	Execution Unit	96	80	96	80	64
	3D/HW Acceleration	DX12, OGL4.0, OCL1.2, HW Encode: H.265, H.264, MPEG2, HW Decode: H.265				
Display I/F	LCD	1 x LVDS: Dual Channel 18/24-bit, up to 1920 x 1200				
	HDMI/DP	1 x HDMI 2.0b, up to 4096 x 2160 x 24bpp@60Hz 1 x DP1.4a, up to 4096 x 2304 x 36bpp@60Hz				
	Multiple Display	4 simultaneous displays via LVDS + HDMI + DP + USB Type-C Alt. Mode				
Ethernet	Controller	LAN1: Intel i219LM, LAN2: Intel i226				
	Speed	LAN1: GbE; LAN2: 2.5GbE				
External I/O	Ethernet	2 x RJ-45				
	HDMI/DP	1/1				
	USB Type-C	1 x USB3.2 Gen2x1 10Gbps, support DisplayPort1.4 Alt. Mode				
	USB3.2	4 x USB3.2 Gen2x1 10Gbps				
	LED	Power status, SATA R/W				
	Power DC-Jack	Optional				
Internal I/O	SATA	1 x SATA Gen3 6.0Gbps				
	USB4	1 x USB4 Type-C (up to 40Gbps, backward compatible USB 3.2, DisplayPort 1.4 Alt. Mode, PCIe Tunneling)				
	USB2.0	2				
	COM Port	2 x RS-232/422/485, 2 x RS-232 (4-wire), max. 1Mbps				
	CANBus	2 x CAN2.0				
	Serial Bus	3 x I2C (CN6 is BOM option to 1 x SMBus by request; First priority is to use CN6; On Windows, CN7 & CN8 are supported by custom BIOS)				
	Audio	Realtek ALC888s, Line-in/Line-out/MIC				
	GPIO	8-bit general purpose input output I/O				
	Invertor	12V/5V/3.3V selectable				
	Fan	12V, 1A (4-wire)				
	Front Panel Control	Power-on, Reset, Buzzer, SATA LED, CaseOpen				
Board Feature	Watchdog Timer	65536 level, 0~65535 sec				
	TPM	Discrete TPM2.0, fTPM* support by request				
	iManager 3.0	SW API for Hardware Monitor, Smart Fan Control, Brightness Control, I2C, GPIO, WDT				
Expansion	M.2 E-Key	1 x E-Key 2230 (PCIex1, USB2.0)				
	M.2 B-Key	1 x B-Key 3042 (PCIex1, SATA, USB2.0) for storage and 4G/LTE module w/ Nano SIM (Default with 3042. *Support 3052 for 5G module by request.)				
	M.2 M-Key	1 x M-Key 2280 (PCIex4 Gen.4 NVMe)				
Power	Supply Voltage	Vin: DC 12V~24V +/- 10%; RTC Battery: Lithium 3V/210mAH				
	Connector	ATX 2x2 pin 90D, optional DC-Jack or ATX 2x2 pin 180D				
	Power Management	AT, ATX				
	Max. Consumption (*Ref. data with Burn-In Test. Please contact FAE for adapter selection.)	82.8W (12V) / 96.6W (24V)	TBD	55.6W (12V) / 66.8W (24V)	55.6W (12V) / 76.2W (24V)	57.7W (12V) / 74.0W (24V)
	Idle Consumption	29.0W(12V) / 29.5W (24V)	TBD	22.9W (12V) / 25.0W (24V)	21.1W (12V) / 23.3W (24V)	20.1W (12V) / 25.2W (24V)
Environment	Temperature	Operating: Standard: 0 ~ 60° C (32 ~ 140° F) Storage: -40 ~ 85 °C (-40 ~ 185 °F)				
	Humidity	Operating: 40° C @ 95% relative humidity, non-condensing Storage: 60° C @ 95%relative humidity, non-condensing				
	Vibration Resistance	3.5 Grms				
Certification	EMC	CE, FCC Class B				
Mechanical	Dimensions	146 x 102 mm (5.7" x 4")				

*Note: Support by request

All product specifications are subject to change without notice.

Last updated: 23-Nov-2026

Block Diagram

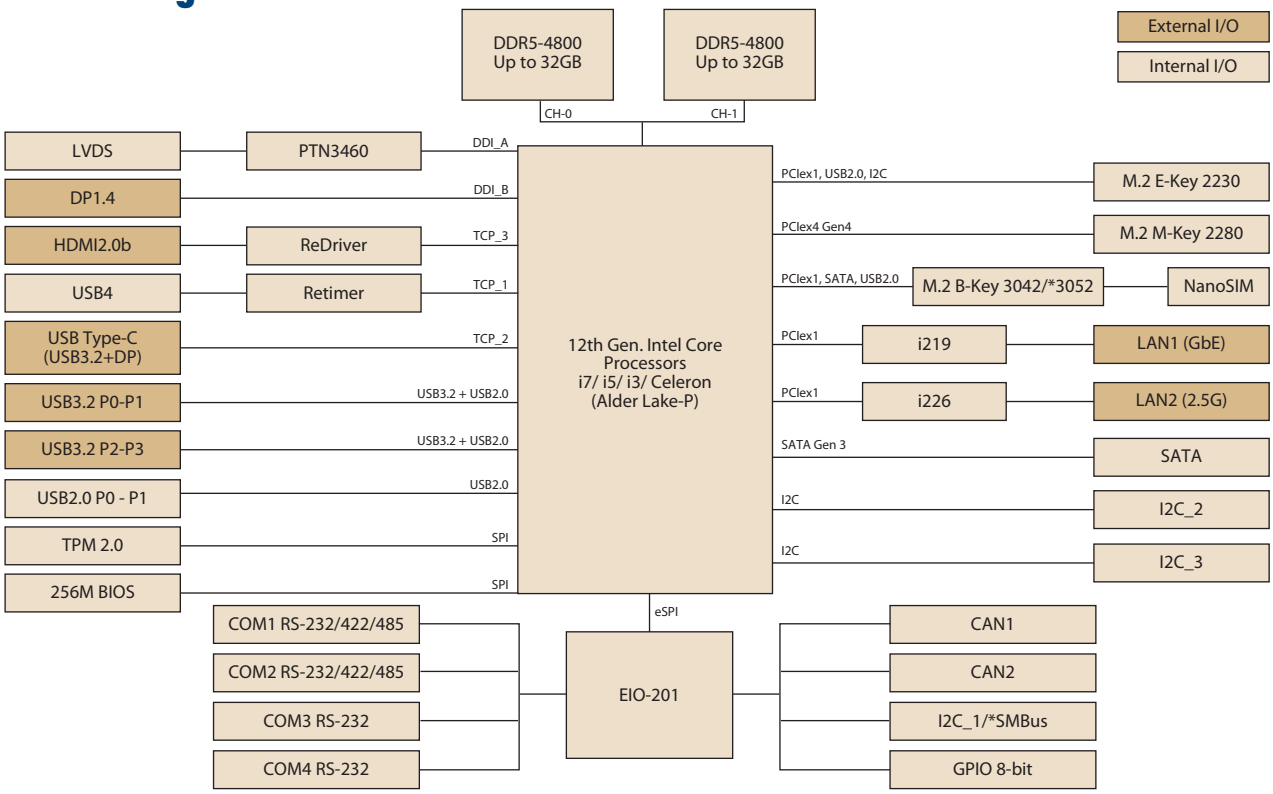

*Note: Support by request

Ordering Information

Part No.	CPU	Core	Max. Frequency	TDP	GPU	Execution Units	Thermal Solution	Operating Temperature
MIO-5377C7P-Q5A1	i7-1270PE	4P+8E	4.40 GHz	28W	Xe Graphics	96 EUs	Active Cooler	0 ~ 60 °C
MIO-5377C7-Q7A1	i7-1265UE	2P+8E	4.70 GHz	15W	Xe Graphics	96 EUs	Passive Heatsink	0 ~ 60 °C
MIO-5377C5-Q4A1	i5-1245UE	2P+8E	4.40 GHz	15W	Xe Graphics	80 EUs	Passive Heatsink	0 ~ 60 °C
MIO-5377C3-Q4A1	i3-1215UE	2P+4E	4.40 GHz	15W	UHD Graphics	64 EUs	Passive Heatsink	0 ~ 60 °C

Packing List

Part No.	Description	Quantity
	MIO-5377 SBC	
2046537700	Startup Manual	1
1700006291	SATA cable 30cm	1
1700031583-01	SATA Power cable, 15P/1*2P-2.0 35cm	1
1700030406-01	M Cable 2*5P-2.0/USB-A 4P(F)*2 20cm	1
1700030404-01	RS-232 9P(M)/1*10P-1.25 20cm	2
1700031582-01	COM3/4 Cable, D-SUB 9P(M)/1*5P-1.25 20cm	2
1700019584-01	A Cable 2*5P-2.0/Audio JACK*3 20cm	1
1970005548T001	MIO-5377 Heatsink (Passive)	1
1970005512T001	MIO-5377 QFCS (Active)	1

Optional Accessories

Part No.	Description
1970005615T001	MIO-5377 Heatspreader
MIOe-UMXM-FVA1	USB4 to MXM carrier card, ATX conn., 12V
MIOe-UMXM-WVA1	USB4 to MXM carrier card, Phoenix conn., 12~24V

Rear I/O View



Embedded OS/API

OS	Part No.	Description
Windows 11 LTSC	20706WLH1S0149	Win 11 IoT Ent LTSC 2024 High End: Core i7
	20706WLV1S0149	Win 11 IoT Ent LTSC 2024 Value: Core i5/i3
Ubuntu 22.04 LTS	20706U22DS0001	Ubuntu Desktop 22.04 LTS 64-bit
ROS2 Suite	Download from ESS-WIKI	Advantech ROS2 Suite v1.3.0
Software API	Download by website	SUSI v4.0
Yocto BSP	Support by Request	Yocto BSP and Test Image

Compatible Expansion Boards

MIOe-UMXM



Specifications

Product	MXM carrier card	MIOe-UMXM-WVA1	MIOe-UMXM-FVA1
Expansion	Supported MXM Modules	Type A	Type A, B, B+
Power	Supply DC-in	12~24V	12V
	Connector	2-pin phoenix connector	ATX 2x2pin 180D, optional to 90D
	MXM Power Requirement	Supply up to 60W TGP MXM	Supply up to 115W TGP MXM
Internal I/O	USB4	2, support alternate mode: DP1.4, up to 40Gbps bandwidth; 1 port upstream to Host, 1 port downstream to Device	
	SMBus	1	
	Fan	12V, 4-wire smart fan	
External I/O	DP	4 x DP1.4a, up to 3840x2160 (4K UHD) resolution @120Hz, or 7680x4320 (8K) @60Hz. max. 4 simultaneous outputs	
Environment	Temperature	Operating: 0~55°C	Operating: 0~50°C
	Humidity	Operating: 40 @95% relative humidity, non-condensing	
	Vibration Resistance	3.5 Grms	
Certification	EMC	CE, FCC Class B	
Mechanical	Dimensions	140 x 100mm	
Compatible	USB4 Host	MIO-5377, MIO-5377R series	MIO-5377, MIO-5377R series
	MXM GPUs	SKY-MXM-A1000-4SDA	SKY-MXM-A1000-4SDA SKY-MXM-A4500-6SDA

Ordering Information

Part No.	MXM support Type	USB4 (Type-C)	DP	Power DC-in	Power Connector	Operating Temperature
MIOe-UMXM-WVA1	Type A	2	4	12~24V	Phoenix	0 ~ 55 °C
MIOe-UMXM-FVA1	Type A, B, B+	2	4	12V	ATX	0 ~ 50 °C