MIO-5393

9th/8th Gen. Intel® Xeon®/Core™ Processor, 3.5" SBC w/ MIOe

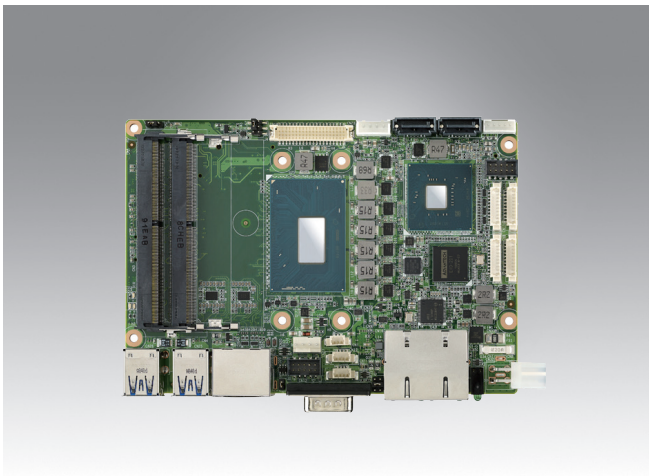

Features

- 9th/8th Gen. Intel® Xeon®/Core™ Processor, up to 6 cores, and TDP 45W/25W
- Dual channel DDR4-2400, up to 64GB*, ECC for Xeon SKU
- Triple simultaneous displays with 48-bit LVDS+HDMI+DP
- USB 3.1 Gen2 (10 Gbps), TPM 2.0 & NVMe/PCIe Gen3x4 SSD
- Dual GbE, SATAIII, RS-232/422/485, CANBus, SMBus, I2C
- M.2 B-Key 2280/3042, (optional M-Key 2280) & M.2 E-Key 2230
- Supports iManager, SUSI APIs, WISE-DeviceOn and Edge AI Suite

Software APIs:

GPIO | SMBus/I²C | Watch Dog Timer | Backlight On/Off | Brightness | CAN bus | Hardware Monitor | System Throttling | Thermal Protection | Smart Fan | Data Security | System Info

ubuntu yocto PROJECT Windows 10 iManager WISE-DeviceOn CE FC

Specifications

Platform	Processor	E-2276ME	i7-9850HE	i7-9850HL	i5-8400H
	Max. Frequency	4.5 GHz	4.4 GHz	4.1 GHz	4.2 GHz
	Base Frequency	2.8 GHz	2.7 GHz	1.9 GHz	2.5 GHz
	Core/Tread	6C/12T	6C/12T	6C/12T	4C/8T
	Last Level Cache	12MB	9MB	9MB	8MB
	CPU TDP	45W	45W	25W	45W
	Chipset	CM246	QM370	QM370	QM370
	BIOS	AMI UEFI 256Mbit			
Memory	Technology	DDR4-2400			
	Max. Capacity	32GB (*Support 64GB with SQR P/N: SQR-SD4N32G2K6SNME x2 or SQR-SD4N32G2K6SEME x2)			
	Channel/Socket	Dual Channel 260P SO-DIMM (1 DIMM per Channel)			
	ECC Support	Yes	No	No	No
Graphics	Controller	Intel Gen 9 low power graphics			
	Max. Frequency	1150 MHz	1150 MHz	1150 MHz	1100 MHz
	Base Frequency	350 MHz	350 MHz	350 MHz	350 MHz
	3D/HW Acceleration	3D: DX 2015/11.2/11.1/10/9 ; OpenGL4.5; OpenCL 2.0/1.2/1.0 HW Decode: AVC/H264, VC1/WMV9, MPEG2, H265 (8/10 bits), VP8, JPEG/MJPEG, VP9 HW Encode: AVC/H264, MPEG2, H265, VP8, JPEG, VP9			
Display I/F	LCD	1 x LVDS Dual Channel 24-bit, up to WUXGA 1920 x 1200 at 60Hz; *Optional, eDP 1.4, support up to 4096x2304 @ 60Hz			
	HDMI/DP	1 x HDMI 1.4a. Support up to 4096x2160 @ 30 Hz; 1 x DP 1.2, Support up to 4096x2304 @ 60Hz			
	Multiple Display	Triple simultaneous displays with 48-bit LVDS/eDP + HDMI + DP			
Ethernet	Controller	LAN1: Intel i219, LAN2: Intel i210			
	Speed	10/100/1000 Mbps			
External I/O	Ethernet	2 x RJ-45			
	VGA/HDMI/DP	-/1/1			
	USB3.1	4 (USB3.1 Gen.2)			
	COM Port	1 x RS-232/422/485			
	LED	Power status, HDD R/W			
	Power DC-Jack	Optional			
Internal I/O	SATA	2 x SATA GenIII 6.0Gbps			
	USB2.0	2			
	Serial Bus	1 x SMBus; 1 x I2C			
	COM Port	1 x RS-232/422/485			
	GPIO	2 x 8-bit general purpose input/output			
	Audio	Realtek ALC888S, High Definition Audio (HD), Line-in, Line-out, Mic-in			
	Invertor	3.3/5/12V for VDD power, 5/12V for inverter			
	LPC/SPI Bus	LPC for EC & SPI for BIOS & TPM 2.0			
	CAN Bus	1			
	Fan	1 x 4-Wire Smart Fan,12V@2A			
	Front Panel Control	Power LED, HD LED, Reset, Power Switch, Case Open, Buzzer			
Board Feature	Watchdog Timer	65536 level, 0-65535 sec			
	TPM	TPM2.0 (Infineon SLB9670)			
	iManager 3.0	Software APIs for Power Monitor, CPU Temp., Smart Fan, GPIO, WDT, SMBus, I2C, Backlight & Brightness Control, CANBus			
Storage	NVMe	1, PCIe Gen.3 x4 with optional M-key 2280			
	SATA	2, up to 6Gb/s (600 MB/s)			
Expansion	M.2	1 x E-Key (PCIe x1, USB 2.0) - M.2 2230 WiFi/BT module 1 x B-Key (PCIe Gen.3 x2, SATA Gen.3, USB2.0) - M.2 2280 SSD module or M.2 3042 4G/LTE module (with nano SIM slot and bracket) *Optional, M-Key (PCIe Gen.3 x4, SATA Gen.3) - M.2 2280 NVME/PCIE Gen.3x4 SSD module			
	mPCIe/mSATA	-			
	MI/O Extension	DDI x 1, 4 PCIe x1, USB3.0, USB2.0, LPC, SMBus, Line-out, Power-on, Reset			
Power	Supply Voltage	Vin: DC 12V ± 10%; RTC Battery: Lithium 3V/210mAH			
	Connector	ATX 2x2 pin 90D, optional DC-Jack with lock or ATX 2x2 pin 180D			
	Power Management	AT, ATX			
	Max. Consumption	102.75W	95.38W	44.55W	74.44W
	Idle Consumption	11.55W	11.55W	11.55W	11.55W
Environment	Temperature	Operating: Standard: 0 ~ 60 °C (32 ~ 140 °F); Extend: -40 ~ 85 °C (-40 ~ 185 °F) Storage: -40 ~ 85 °C (-40 ~ 185 °F)			
	Humidity	Operating: 40 °C @ 95% relative humidity, non-condensing Storage: 60 °C @ 95%relative humidity, non-condensing			
	Vibration Resistance	3.5 Grms			
Certification	EMC	CE, FCC			
	Safety	-			
Mechanical	Dimensions	146 x 102 mm (5.7" x 4")			

All product specifications are subject to change without notice.

Last updated: 23-Nov-2026

Block Diagram

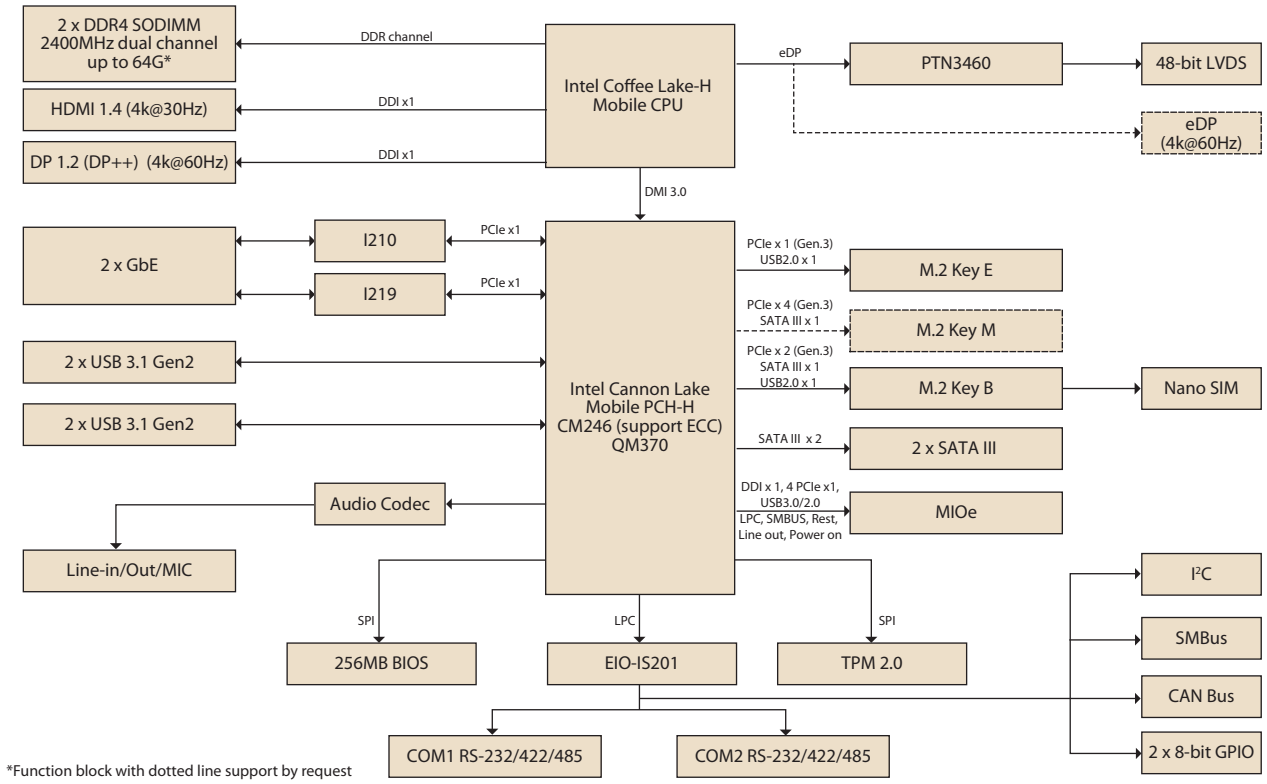

*Function block with dotted line support by request

Ordering Information

Part No.	CPU	Core	Max. Frequency	TDP	vPro	PCH	ECC	LVDS/eDP[1]	M.2 Slot Extension[2]	Power Connector[3]	Thermal Solution	Operating Temperature
MIO-5393RE6C-U8A2	E-2276ME	6	4.5 GHz	45W	Yes	CM246	Yes	LVDS	B-key + E-key	2x2 pin	Active	0 ~ 60 °C
MIO-5393RC7Q-U7A2	i7-9850HE	6	4.4 GHz	45W	Yes	QM370	No	LVDS	B-key + E-key	2x2 pin	Active	0 ~ 60 °C
MIO-5393RC7Q-S9A2	i7-9850HL	6	4.1 GHz	25W	Yes	QM370	No	LVDS	B-key + E-key	2x2 pin	Passive	0 ~ 60 °C
MIO-5393C5Q-U5A2	i5-8400H	4	4.2 GHz	45W	Yes	QM370	No	LVDS	B-key + E-key	2x2 pin	Active	0 ~ 60 °C
MIO-5393RE6CX-U8A2	E-2276ME	6	4.5 GHz	45W	Yes	CM246	Yes	LVDS	B-key + E-key	2x2 pin	Active	-40 ~ 85°C

1. eDP is supported by request
2. M.2 M-key +E-key is supported by request
3. DC-Jack with lock is supported by request

Optional Accessories

Part No.	Description
1960094211T001	Active Cooler (65mm height)
1970006449T001	Heat Spreader (16.7mm height)
1700030406-01	Internal 2 ports USB cable 20cm

Packing List

Part No.	Description	Quantity
	MIO-5393 SBC	1
2046539300	Startup Manual	1
1700006291	SATA cable	1
1700018785	SATA Power cable	1
1700019584-01	Audio cable	1
1700030404-01	COM cable	1
1970004482T000	QFCS Cooler (TDP 45W SKU ; 43mm height)	1
19Z0001957N002	CPU bracket for Passive Heatsink (TDP 25W SKU)	1
1960094210N000	Passive Heatsink (TDP 25W SKU)	1
	Mini Jumper pack (10pcs)	1
	Screw kit (2pcs for M.2 device)	1
	Screw Kit (4 sets of screw & stand-off)	1

Embedded OS/API

Embedded OS/ API	Part No.	Description
Win10 IoT Enterprise	20706WX9HS0051	2019 LTSC, 64bit, 1809, High End: Xeon /Core i7
	20706WX9VS0055	2019 LTSC, 64bit, 1809, Value: Core i5/Core i3
Linux	20706U20DS0000	Ubuntu Desktop 20.04, LTS, 64bit, Image for MIO-5393 and License Sticker
Yocto BSP	Support by Request	Yocto BSP and Test Image
Software API	Website Download	SUSI 4.0

Rear I/O View



Reliable Embedded BIOS Solutions

Custom BIOS services with long-term support

Advantech's high-quality embedded BIOS solutions deliver rapid execution and feature expert BIOS team support. These solutions feature multi-functional designs that ensure security and enable power/boot management. Advantech further provides 10+ years of BIOS version management, internal management, and longevity support for both hardware and BIOS — enhancing application efficiency, diversifying functionality, and optimizing performance.

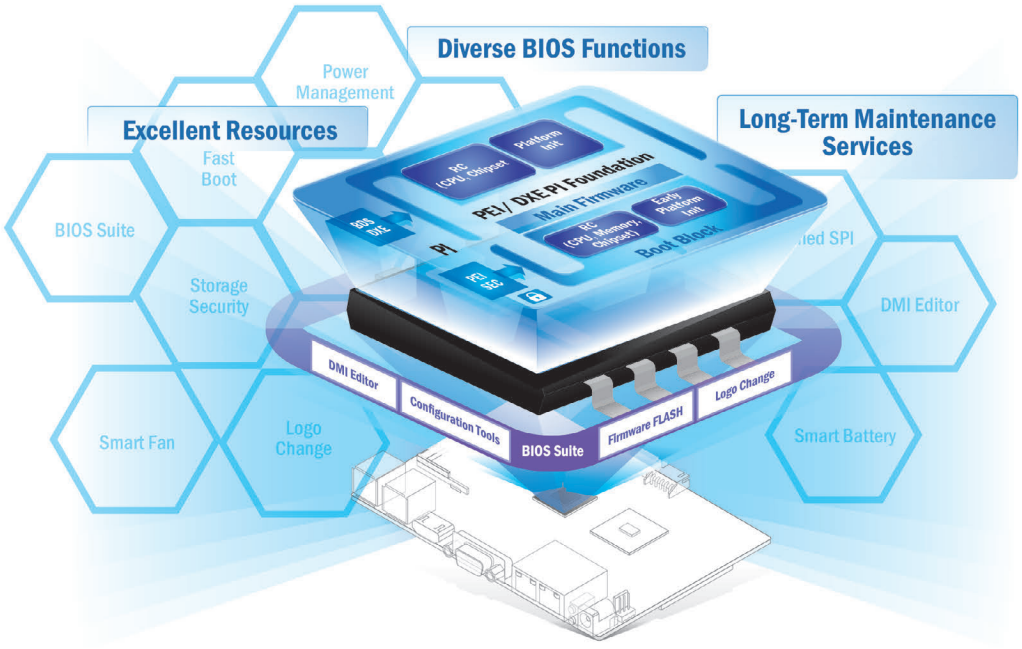

Embedded BIOS Solution Advantages

Sufficient Sources

- Strong partnership with BIOS vendors
- 50+ engineers with extensive industrial BIOS experience

Diverse BIOS Functions

- Multi-layer security
- 3 second fast boot
- Power management
- BIOS suite utility

Long-Term Maintenance Services

- Platform longevity support
- 10-year BIOS version control
- BIOS remote backup

Value-Added Customization Process

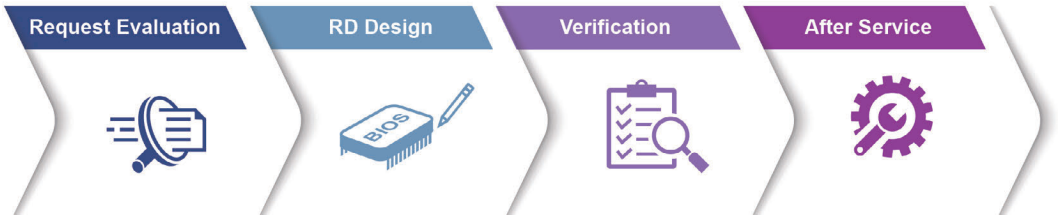

Embedded Linux Support and Design-in Services

Hardware Certified Ubuntu and Yocto with Eco Partner Services

Linux is the most popular embedded OS for transportation, outdoor services, factory automation, and mission critical applications. Its open source and kernel reliability features ease security updates, and make it particularly adaptable to new AI and Edge computing technology. Advantech has cooperated with Canonical and other software partners to provide hardware certified Ubuntu image and Yocto BSP as Linux offerings. The Advantech, Embedded Linux, and Android Alliance (ELAA) delivers local software services and consultation.

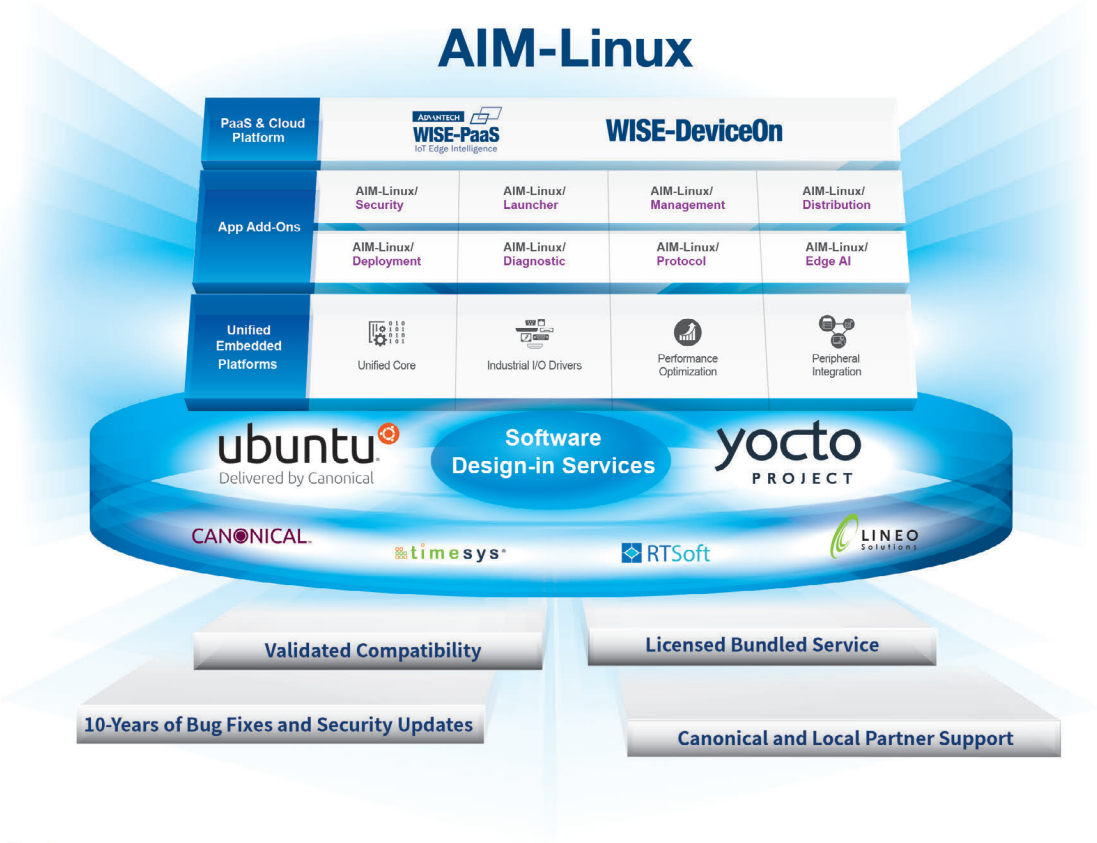

Features

Certified OS and BSP

- Platform compatibility tests
- Preloaded functional driver and software stacks

Licensed Services

- License authorized Canonical delivers 10-years of bug fixes and security updates
- In-house bundled service

Numerous AI and Edge Resources

- Containerized technology for service provision and deployment
- AI resources from Caffe, TensorFlow, and mxnet

Local Partner Alliance

- Embedded Linux and Android Alliance (ELAA)

Edge AI Suite

AI development for diverse application at the Edge

Increasing demand for AI inference/analytic capabilities at the Edge make AI training models, software development environments, and hardware configuration key factors in successful solution deployment. Advantech's Edge AI Suite helps users build AI demo devices quickly and choose optimal hardware solutions easily.



5x Performance Boost	All-in-one Installation	One Click AI Experience	Plug-and-play Environment	Discover Cost-effective Hardware
• Integrated Intel® OpenVINO™ technology • Boost AI using Advantech hardware	• Build AI environment in under 5 minutes • Ready-to-use configuration	• User friendly configuration guidance • One-click Benchmark acquisition	• Easy access to 100+ AI inference extensions • Software development package available	• Diverse CPU/RAM options • Find hardware solutions for AI development

WISE-DeviceOn

Massive IoT Device Management Utility

IoT deployment and management typically involves numerous disparate devices installed on multiple sites. These devices require effective monitoring, managing, and tracking. Advantech's easy-to-use WISE-DeviceOn interface enables users to remotely monitor device health, troubleshoot problems, and send software/firmware updates over-the-air (OTA). In sum, DeviceOn empowers quick real-time responsiveness to emerging problems.



Features

Comprehensive Management	Remote Access	Efficient Operations
• Devices status • Peripherals/firmware • Open for extension	• Real-time monitoring • Remote controls • Troubleshooting	• Zero-touch on-boarding • OTA updates • Batch control

Product Highlights



SOM-6883
High-performance 11th Gen Intel® COMe Type 6 Module



MIO-5375
Compact 11th Gen Intel® Outdoor Focused 3.5" SBC



EPC-B5587
10th Gen Intel® Xeon® based Edge server



EPC-R3220
Arm based IoT Edge Gateway