PCE-5133

LGA1700 12/13/14th Gen/Bartlett Lake-S & Intel® Core™ i9/i7/i5/i3/Pentium/ Celeron System Host Board, with DP/ HDMI/VGA, DDR5, USB 3.2, M.2

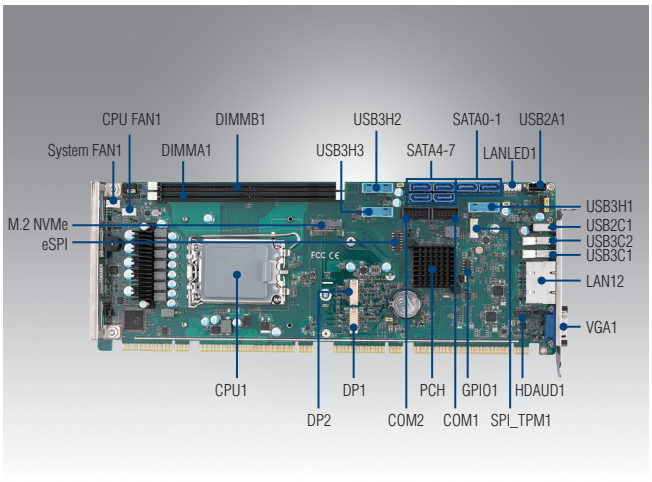

Features

- Intel® 12th/13th/14th generation Core™ i9/i7/i5/i3 processor & Intel® Core™ Processor Series 2 with R680E chipset
- Up to 96 GB of dual-channel (ECC/ non-ECC) DDR5 5600 MHz
- PCIe 3.0, M.2, USB 3.2, SATA 3.0, Dual 2.5GbE LAN and SW Raid 0, 1, 5, 10
- Supports VGA and 2 x DVI-D/DP/HDMI display (with optional cable)
- Supports out-of-band remote management with AMT
- Supports Advantech's TPM and COM modules, SUSI 4.0, and embedded software APIs

Note: Legacy platform is not supported.

Quiet

CE FCC

Specifications

Intel® Core™ Processors Series 2 (Bartlett Lake-S)	CPU	251E	251TE	221E	221TE	211E	211TE	211EF	201E	201TE	300	300T		
	P-core Base Frequency	2.1 GHz	1.4 GHz	2.7 GHz	1.8 GHz	2.7 GHz	1.7 GHz	2.7 GHz	3.6 GHz	2.9 GHz	3.9 GHz	3.4 GHz		
	L3 Cache	36 MB	36 MB	24 MB	24 MB	20 MB	20 MB	20 MB	12 MB	12 MB	6 MB	6 MB		
	Cores	24	24	14	14	10	10	10	4	4	2	2		
	Processor Base Power	65W	45W	65W	45W	65W	45W	65W	60W	45W	46W	35W		
14th Generation Processors	CPU	I9-14900	I9-14900T	I7-14700	I7-14700T	I5-14500	I5-14500T	I5-14400	I5-14400T	I5-14400F	I3-14100	I3-14100T	300	300T
	P-core Base Frequency	2.0 GHz	1.1 GHz	2.1 GHz	1.3GHz	2.6 GHz	1.7 GHz	2.5 GHz	1.5 GHz	2.5 GHz	3.5 GHz	2.7 GHz	3.9 GHz	3.4 GHz
	L3 Cache	36 MB	36 MB	33 MB	33 MB	24 MB	24 MB	20 MB	20 MB	20 MB	12 MB	12 MB	6 MB	6 MB
	Cores	24	24	20	20	14	14	10	10	10	4	4	2	2
	Processor Base Power	65 W	35 W	65 W	35 W	65 W	35 W	65 W	35 W	65 W	60 W	35 W	46 W	35 W
14th Generation Processors P-core only	CPU	I9-14901E	I9-14901TE	I9-14701E	I9-14701TE	I5-14401E	I5-14401TE	I5-14501E	I5-14501TE					
	P-core Base Frequency	2.8 GHz	2.3 GHz	2.6 GHz	2.1 GHz	2.5 GHz	2 GHz	3.3 GHz	2.2 GHz					
	L3 Cache	36MB	36MB	33MB	33MB	24MB	24MB	24MB	24MB					
	Cores	8	8	8	8	6	6	6	6					
	Processor Base Power	65W	45W	65W	45W	65W	45W	65W	45W					
13th Generation Processors	CPU	i9-13900(E)	i9-13900TE	i7-13700(E)	i7-13700T(E)	i5-13500(E)	i5-13500T(E)	i5-13400(E)	i3-13100(E)	i3-13100T(E)				
	P-core Base Frequency (Up to)	2.0 GHz	1.1 GHz	2.1 GHz	1.4 GHz	2.5 GHz	1.6 GHz	2.5 GHz	3.4 GHz	2.5 GHz				
	L3 Cache	36 MB	36 MB	30 MB	30 MB	24 MB	24 MB	20MB	12 MB	12 MB				
	Cores	24	24	16	16	14	14	10	4	4				
	Processor Base Power	65 W	35 W	65 W	35 W	65 W	35 W	65W	60 W	35 W				
12th Generation Processors	CPU	i9-12900(E)	i9-12900TE	i7-12700(E)	i7-12700TE	i5-12500(E)	i5-12400	i5-12500TE	i3-12100(E)	i3-12100TE	Pentium G7400E	Pentium G7400TE	Celeron G6900E	Celeron G6900TE
	P-core Base Frequency (Up to)	2.4 GHz	1.1 GHz	2.1 GHz	1.4 GHz	3.0 GHz	2.5 GHz	1.9 GHz	3.3 GHz	2.1 GHz	3.6 GHz	3.0 GHz	3.0 GHz	2.4 GHz
	L3 Cache	30 MB	30 MB	25 MB	25 MB	18 MB	18 MB	18 MB	12 MB	12 MB	6 MB	6 MB	4 MB	4 MB
	Cores	16	16	12	12	6	6	6	4	4	2	2	2	2
	Processor Base Power	65 W	35 W	65 W	35 W	65 W	65 W	35 W	60 W	35 W	46 W	35 W	46 W	35 W
Processor System	Socket	LGA 1700												
	Chipset	R680E												
	BIOS	AMI 256MB SPI Flash												
Bus	PCI-Express	1 x PCIe x16/2 x PCIe x8 and 1 x PCIe x4 to backplane												
	PCI	4 x PCI master to backplane, 32-bit, 33 MHz												
Memory	Technology	Dual-channel (ECC/non-ECC) U-DIMM DDR5 5600 MHz												
	Max. Capacity	Up to 96GB												
	Socket	2 x DDR5 288-pin DIMM												
Graphics	Controller	Chipset integrated with Intel® UHD Graphics												
	VRAM	Shared system memory is subject to OS												
	VGA	Supports resolutions of up to 2048 x 1152 pixel @ 60 MHz												
	DVI-D	Supports resolutions of up to 1920x 1200 @ 60 MHz												
	Display Port	Supports resolutions of up to 4096 x 2160 @ 60 MHz												
	HDMI	Supports resolutions of up to 1920 x 1080 @ 60MHz												
	Triple Display	1st: VGA, 2nd DP/DVI-D/HDMI, 3rd DP/DVI-D/HDMI (2nd and 3rd display via optional cable)												
Ethernet	Interface	10/100/1000/2500 Mbps												
	Controller	LAN 1: Intel® I226-LM LAN 2: Intel® I226-LM												
	Connector with LED	2 x RJ45												

All product specifications are subject to change without notice.

Last updated: 29-Jun-2026

Specifications (Cont.)

Rear I/O	USB 3.2 Gen2	2	
	USB2.0	1	
	Ethernet	2	
	VGA	1	
Internal Connector	USB	5 x USB 2.0 (1 USB Type A + 4 to backplane), 6 x USB 3.2	
	SATA (SW Raid 0,1,5,10)	6	
	M.2 (2280 Type M)	1 (PCIe x4)	
	DP/DVI-D/HDMI	2 (Pin header)	
	COM	2 x RS232	
	GPIO	8bit	
Watchdog Timer	Output	System reset	
	Interval	Programmable 1-255 sec	
Miscellaneous	Audio	Intel® High Definition audio interface (requires audio extension module PCA-AUDIO-HDB1E)	
Power Requirement	Test Environment	Intel i9-12900E, Memory *2 DDR5 16GB	
	Voltage	+3.3V, +5V, +12V	
	Current	2.52A, 4.13A, 6.86A	
Environment		Operating	Non-Operating
	Temperature	0 ~ 60 °C (dependent on CPU and cooler solution)	-40 ~ 85 °C
	Humidity	40 °C @ 85% relative humidity (non-condensing)	60 °C @ 95% relative humidity (non-condensing)
Physical	Dimensions (L x H)	338 x 122 mm (13.3" x 4.8")	

Note: Power must be turned off before installing any expansion modules

Block Diagram

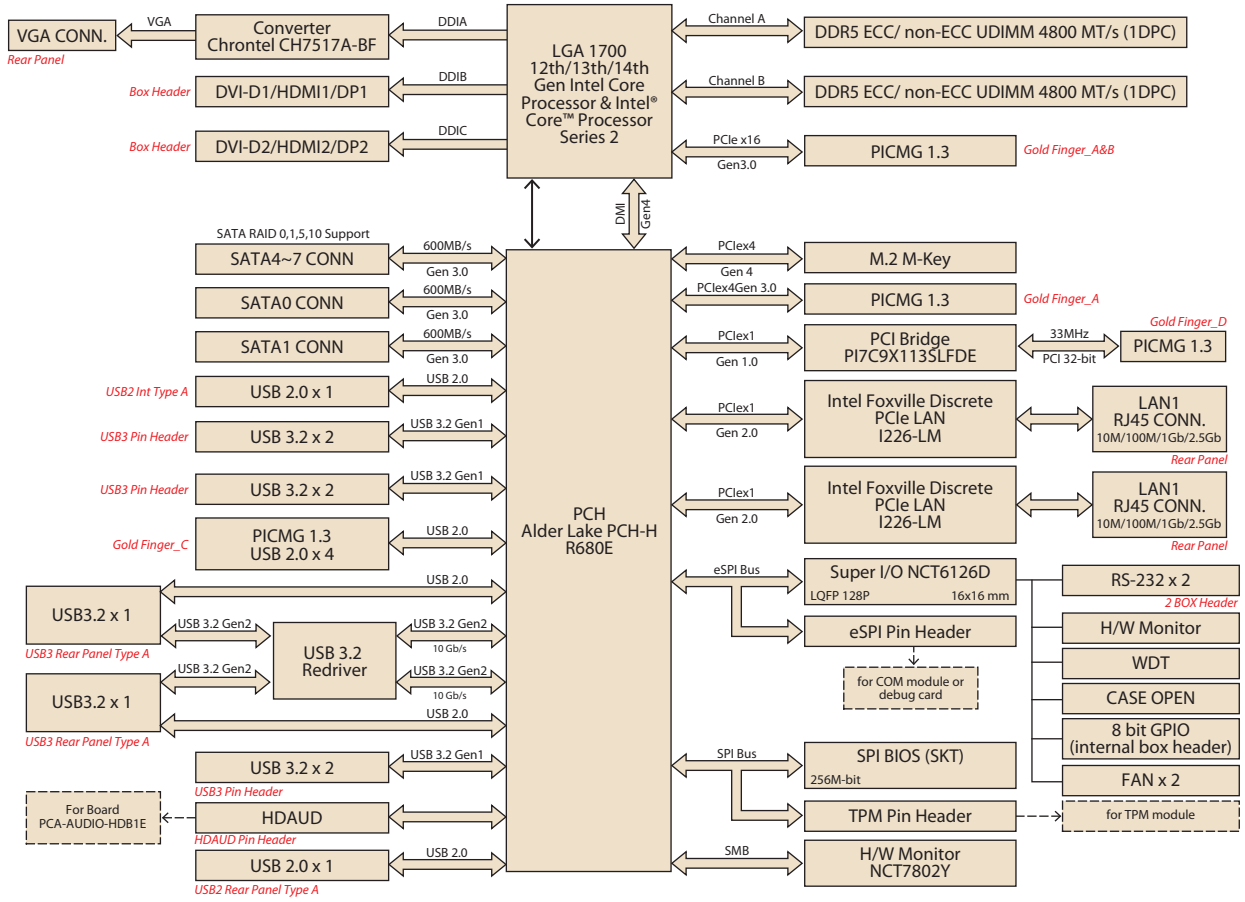

Ordering Information

Part Number	PCH	Memory	Backplane	LAN	VGA	DP/DVI-D/ HDMI	COM	SATA III	M.2	USB 2.0	USB 3.2 (Gen1)	USB 3.2 (Gen2)	S/W Raid	AMT
PCE-5133G2-00A2	R680E	ECC/ non-ECC	PCE-5BXX PCE-7BXX	2	Yes	2*	2	6	1	4	6	2	Yes	Yes
PCE-5133G2-00A2U	R680E	ECC/ non-ECC	PCE-5BXX PCE-7BXX	2	Yes	2*	2	6	1	4	6	2	Yes	Yes

Note: DP/DVI/HDMI cable is optional

Packing List

Part Number	Description	Quantity
1700003194	Serial ATA HDD data cable	x2
1701090401	COM cable w/ BKT 40cm	x1
2190000902	Warranty card	x1
2041513300	Startup manual	x1

I/O View

PCE-5133G2-00A2
PCE-5133G2-00A2U

Optional Accessories

Part Number	Description
1970005349T000	CPU cooler for 2U, 4U, and wall-mount chassis (for CPU Base Power=35~125W)
PCA-AUDIO-HDB1E	Audio module
PCA-COM232-ESPA1	4-port RS-232 eSPI module
PCA-COM485-ESPA1	4-port RS-422/485 eSPI module
1700002204	2-port USB2.0 cable w/BKT (27 cm)
1700028292-01	2-port USB 3.0 cable w/ BKT (30 cm)
1700031719-01	4-port USB 3.0 cable w/ BRK (30 cm)
1700021831-01	DP to DVI-D cable w/ BKT
1701090401	1-port COM cable kit
1701092300	2-port COM cable kit
PCE-DP10-00A1E	DP to DP cable w/ BKT
PCE-DP20-00A1	2-port DP to DP cable w/BKT
1700034454-01	DP to HDMI cable w/ BKT
PCA-TPMSPI-00A1	dTPM 2.0 SPI module
20706WX1HS0054	PCE-5133 win 10 embedded OS (high-end)
20706WX1VS0054	PCE-5133 win 10 embedded OS (value)
20706WX1ES0054	PCE-5133 win 10 embedded OS (entry)
20706U22DS0025	img UbuntuD PCE-5133 64b 22.04 ENU
20706WLH1S0039	PCE-5133 win11 embedded OS (high-end)
20706WLV1S0039	PCE-5133 win11 embedded OS (value)
20706WLE1S0039	PCE-5133 win11 embedded OS (entry)