UTC-310

10.1" Ubiquitous Touch Computer
UTC-310J with Celeron® J6412



Features

- Low power and fanless system design
- Built-in Celeron® J6412 (UTC-310J)
- 10.1" monitor with 16:10 widescreen display
- IP65-rated front panel for water and dust resistance
- Supports both landscape and portrait screen orientations
- VESA 75 mm standard mounting holes for varied mounting demands
- Detachable plastic frame design for panel mount applications
- PoE supported on Celeron® J6412 platform
- Support TPM 2.0

Introduction

UTC-310 features an all-in-one computing system equipped with wide format, touch based LCD panel. It is easy to integrate key peripherals and display systems for diversified self-service and interactive signage deploy in different application areas. The systems deliver updated information with well-designed interactive interfaces, fully ensure relevant content and targeted promotions are delivered. UTC series touch panel computers are the best investments to enhance user satisfaction, further brand equity, and maximize business profits.

Specifications

Processor System	CPU	Intel® Celeron® J6412 (UTC-310J)
	Base Frequency	2.0 GHz (Quad-Core)
	Cache	L2 Cache 1.5MB
	Memory	DDR4-3200 up to 32GB
	Storage	1x M-Key support SATA M.2 2242 / 1 x 2.5 internal SATA storage bay (2.5" N/A with Internal PoE)
	Network (LAN)	2 x Gigabit Ethernet ports (Supports Wake on LAN)
	I/O ports	2 x RS-232 COM (COM2 RS-232/422/485) 2 x USB3.0 / 2 x USB3.0 (optional) 2 x Gigabit Ethernet ports (1 with optional PoE)
	Stereo Speaker	1 x 2W
	Bus expansion	1 x M.2 key2230, 1 x M.2 key2242
	Mounting	VESA 75 x 75 mm (Screw Size, M4, 6mm)
	Dimensions (W x H x D)	251 x 170 x 32.5 mm
	Weight	1.12kg (2.46lbs)
Security		Support TPM2.0
OS Support		Windows 10 IoT Enterprise 2021 Windows 11 IoT Enterprise LTSC Android 12 Linux
Environmental Specifications	Operating Temperature	0 ~ 40 °C (32 ~ 104 °F)*
	Relative Humidity	10 ~ 95% @ 40 °C non-condensing
	Vibration	0.5G
	Shock	10G peak acceleration (11 msec. duration)
	Certification	CE, FCC, CB, UL, CCC, BSMI
	Front Panel Protection	IP 65 Compliant
Power Supply	DC Input Rating	12 V/3 A ~ 24 V/1.5 A, 36W ITE Adapter
	PoE	IEEE 802.3at/30W (Optional, N/A with 2.5" storage & extra USB)
	Power consumption	Typical 29.3W Max 44.5W
LCD Display	Size/Type	10.1" TFT LCD with LED backlight
	Max.Resolution	1280 x 800
	Max. Color	16.7M
	Pixel Pitch (um)	169.5 x 169.5
	Brightness (cd/m²)	350
	View Angle	170°/ 170°
Touch Screen Option (PE/GE)	Type	Projected Capacitive. Glass panel (by required)
	Light Transmission	80% ± 5% / 90%
	Controller	USB Interface

All product specifications are subject to change without notice.

Last updated: 12-Nov-2026

Dimensions

Unit: mm

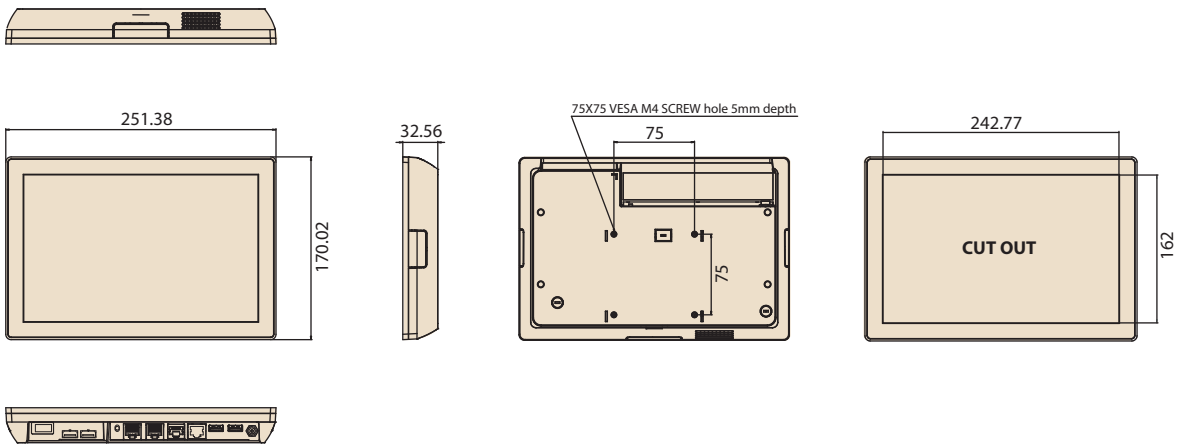

Ordering Information

Part No.	Description
UTC-310JP-ATB1E	10.1" Pcap, J6412, 8G RAM, Black
UTC-310JP-ATW1E	10.1" Pcap, J6412, 8G RAM, White
UTC-310JP-USB1E	10.1" Pcap, J6412, 8G RAM, Black, Made in Taiwan
UTC-310JP-USW1E	10.1" Pcap, J6412, 8G RAM, White, Made in Taiwan
1700001524	Power Cord 3P UL 10A 125V 180cm
170203180A	Power Cord 3P UK 2.5A/3A 250V 1.83M
170203183C	Power Cord 3P Europe (WS-010+WS-083)183cm
1700019146	Power Cord CCC 3P 2.5A 250V 183cm
1700025928-02	COM Port Converter cable RJ48-10P10C to D-SUB 9P 35cm

*UTC-310 PN(UTC-310JP-ATXXX) include the system and the 36W power adapter(96PSA-A36W12W7-5)

Peripherals for UTC-310 series

Tentative Part No.	Description
UTC-300P-M70E	Magnet Strip Reader, White, for UTC-307/UTC-310 series
UTC-300P-M71E	Magnet Strip Reader, Black, for UTC-307/UTC-310 series
UTC-300P-R70E	RFID Reader, White, for UTC-307/UTC-310 series
UTC-300P-R71E	RFID Reader, Black, for UTC-307/UTC-310 series
UTC-300P-B72E	2D Barcode Reader for UTC-310(Internal)
UTC-300P-L70E	LED Light Bar, for UTC-307/UTC-310 series
UTC-300P-U72E	USB3.0 x 2, for UTC-310 (Internal)
UTC-300P-P72E	PoE Kit for UTC-310 (Only can coexist with M.2 SSD)
UTC-300P-W75E	UTC-310 M.2 Wi-Fi(179),2T2R,BT5.2,A/E key

* All peripherals must be ordered together with UTC-310, and assembled by Advantech only

Installation Accessory

Part No.	Description
UTC-WALL-MOUNT5E	UTC VESA mount (75x75)
UTC-PANEL-MOUNT3E	PANEL Mount Kit (UTC-310)
UTC-TABLE-STAND0E	Table Stand, White, For UTC-307/310
UTC-TABLE-STAND1E	Table Stand, Black, For UTC-307/310
ARES-2414X-S150201	Table Stand, Black, ≦17'', max.13kg, 75x75mm

Fully- Integrated I/O



A. Barcode Reader (Optional)
B. USB 3.0 x 2 (Optional, *N/A with default 36W adapter)
C. POWER BUTTON
D. COM W/RS-232
E. COM W/RS-232/422/485
F. LAN Port
G. LAN/PoE Port
H. USB 3.0 x 2
I. DC Power Jack

* UTC-310 PoE SKU – A PoE Powered Device (PD) is a device powered by a PSE and thus consumes energy.
Please do take a Power sourcing equipment (PSE) which follows IEEE 802.3at PoE standard, also known as PoE+ or PoE plus, provides up to 30W of DC power output. Only 25.5 W input is assured to be available at the powered device as some power dissipates in the cable.
The customer can change the configuration only when total power input is under 25.5 W.

OS Information

Part No.	Description
20708WX1ES0062	Img WIN10 LTSC-21-ELE UTC-307J/310J V1.01 7MUI
20708WLE1S0033	WIN11 LTSC_24H2 ELE UTC-307/310J V1.01 7MUI
20708AI0NS0060	UTC-307J/310J Android 12 image V0.5.7